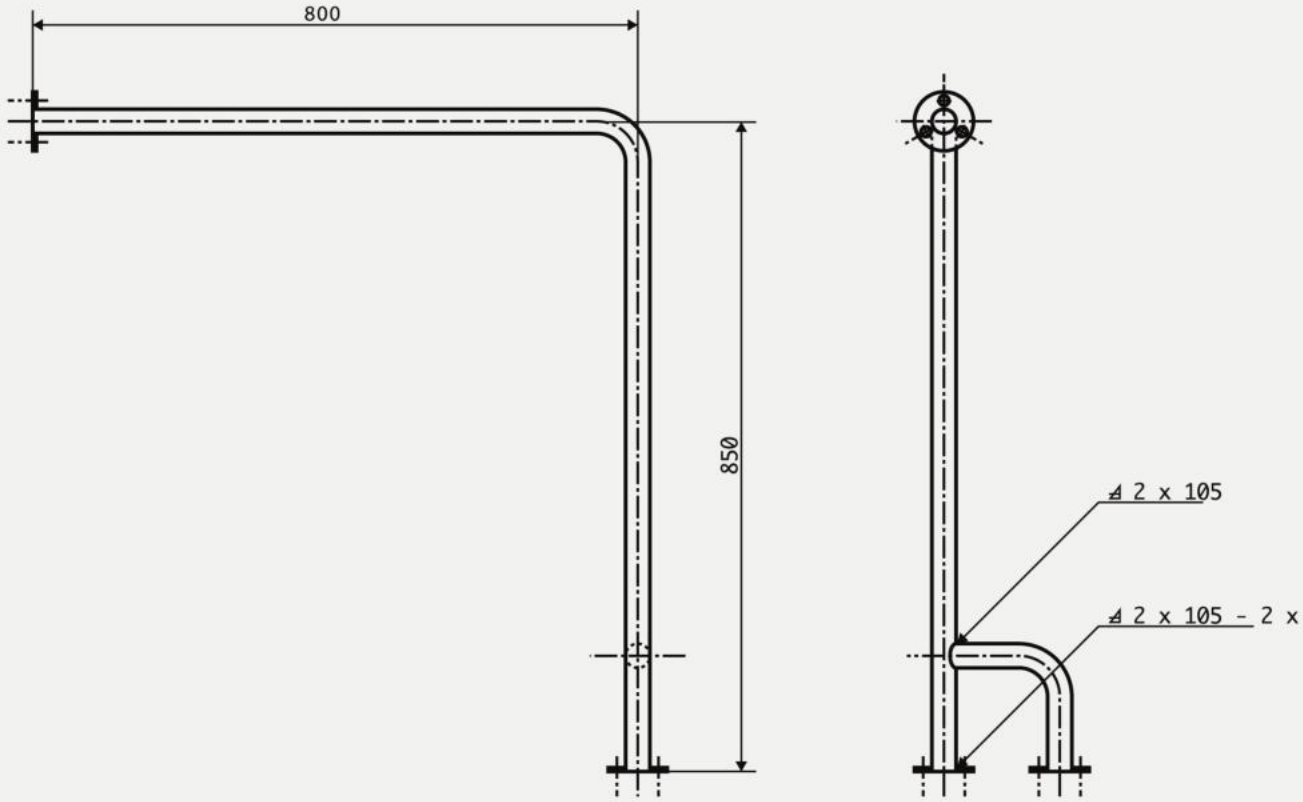

301112134