Wilo-Drain TM/TMW

D	Einbau- und Betriebsanleitung	F	Notice de montage et de mise en service
GB	Installation and Operating Instructions	I	Istruzioni di montaggio, uso e manutenzione

2036885-Ed.03/2008.04-DDD

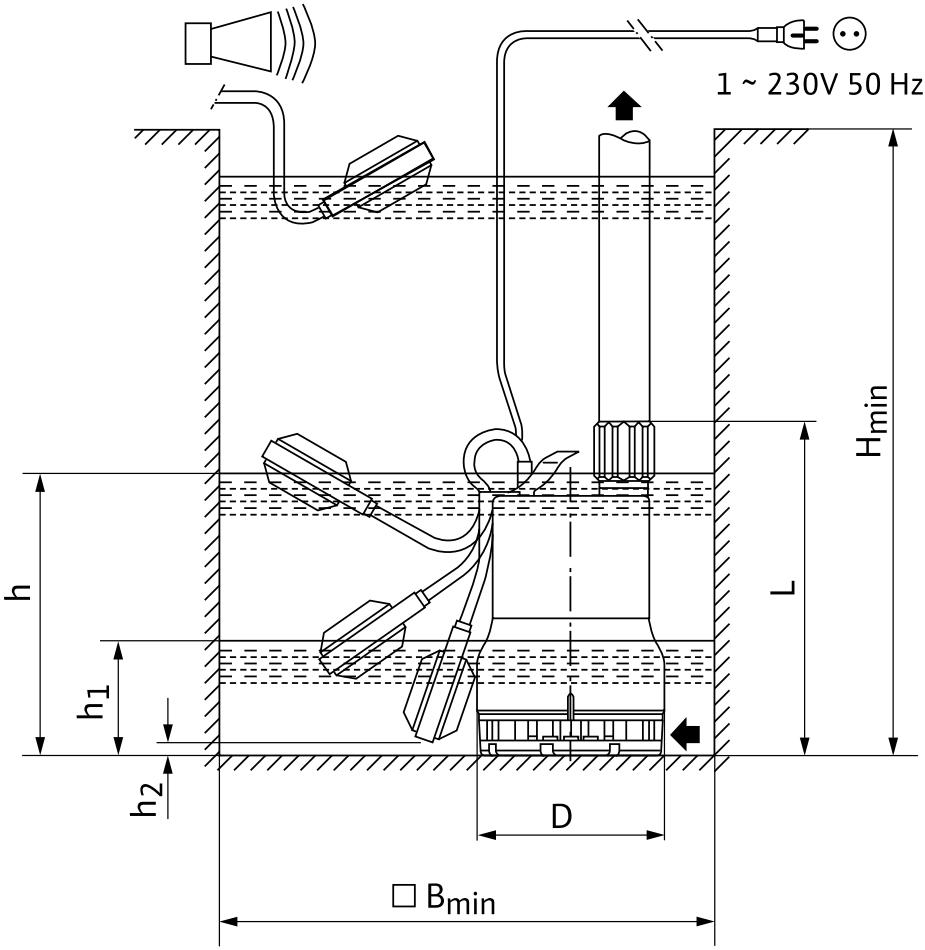

Fig. 1

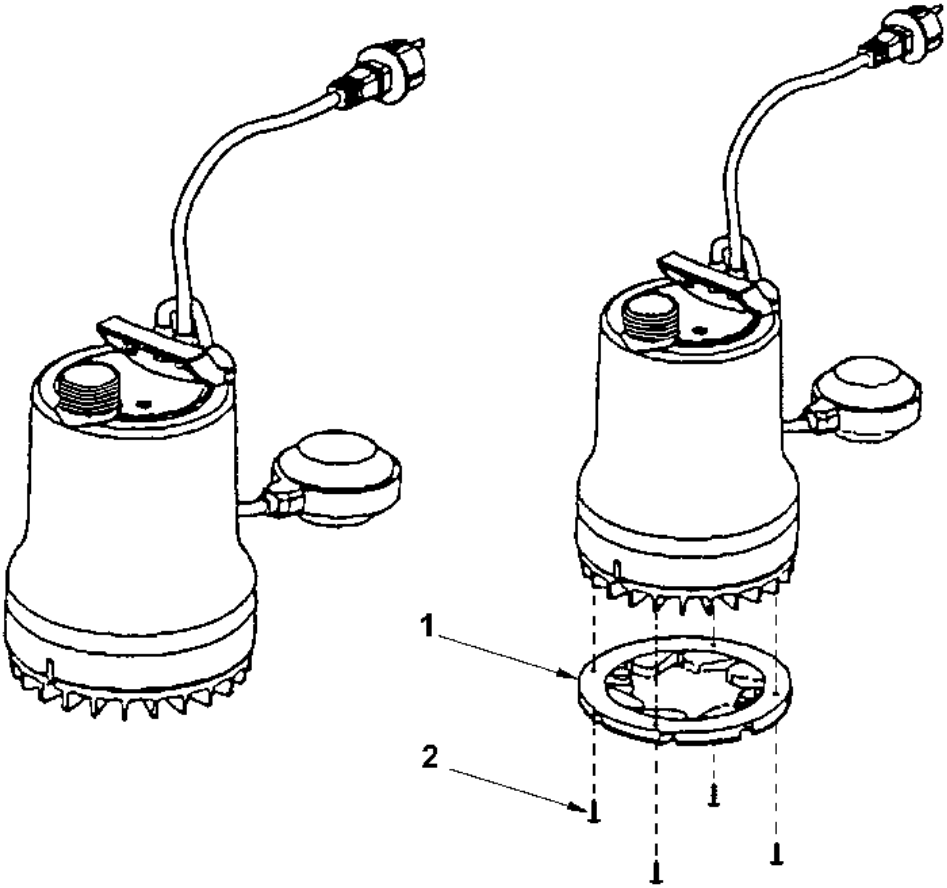

Fig. 2

D

CE-Konformitätserklärung 1-2
1. Allgemeines 3
2. Sicherheit 4
3. Transport und Zwischenlagerung 5
4. Beschreibung von Erzeugnis und Zubehör 5
5. Aufstellung/Einbau 6
6. Inbetriebnahme 7
7. Wartung 7
8. Störungen, Ursachen und Beseitigung . . . 8
9. Demontage und Montage 9

F

Déclaration de conformité CE 1-2
1. Généralités 17
2. Sécurité 18
3. Transport et stockage avant utilisation . . . 19
4. Description du produit et de ses accessoires 19
5. Installation/Montage 20
6. Mise en service 21
7. Entretien 21
8. Pannes, causes et remèdes 22
9. Démontage et montage 23

GB

EC declaration of conformity 1-2
1. General Information 10
2. Safety 11
3. Transport and interim storage 12
4. Product and accessory description 12
5. Assembly/Installation 13
6. Operation 13
7. Maintenance. 14
8. Problems, Causes and Remedies 15
9. Disassembly and assembly 16

I

Dichiarazione di conformità CE 1-2
1. Generalità 24
2. Sicurezza 25
3. Trasporto e magazzinaggio 26
4. Descrizione del prodotto e degli accessori 26
5. Installazione/montaggio 27
6. Messa in esercizio 28
7. Manutenzione. 28
8. Blocchi, cause e rimedi 29
9. Smontaggio e montaggio 30

D

CE-Konformitäts-erklärung

Hiermit erklären wir, daß dieses Aggregat folgenden einschlägigen Bestimmungen entspricht:

EG-Maschinenrichtlinien 89/392/EWG i.d.F., 91/368/EWG, 93/44/EWG, 93/68/EWG

Elektromagnetische Verträglichkeit 89/336/EWG i.d.F. 92/31/EWG, 93/68/EWG

Angewendete harmonisierte Normen, insbesondere **EN 809, EN 50 081-1, EN 50 082-1, EN 50 081-2, EN 50 082-2.**

GB

EC declaration of conformity

We hereby declare that this unit complies with the following relevant provisions:

EC machinery directive 89/392/EWG in this version, 91/368/EWG, 93/44/EWG, 93/68/EWG

Resistance to electromagnetism 89/336/EWG in this version 92/31/EWG, 93/68/EWG

Applied harmonized standards in particular: **EN 809, EN 50 081-1, EN 50 082-1, EN 50 081-2, EN 50 082-2.**

F

Déclaration de conformité CE

Par la présente, nous déclarons que cet agrégat sitisfait aux dispositions suivantes:

Directives CEE relatives aux machines 89/392/CEE, 91/368/CEE, 93/44/CEE, 93/68/CEE

Compatibilité électromagnétique 89/336/CEE, 92/31/CEE, 93/68/CEE

Normes utilisées harmonisées, notamment **EN 809, EN 50 081-1, EN 50 082-1, EN 50 081-2, EN 50 082-2.**

NL

EG-verklaring van overeenstemming

iermede verklaren wij dat deze machine voldoet aan de volgende bepalingen:

EG-richtlijnen betreffende machines 89/392/EEG, 91/368/EEG, 93/44/EEG, 93/68/EEG

Elektromagnetische tolerantie 89/336/EEG, 92/31/EEG, 93/68/EEG

Gebruikte geharmoniseerde normen, in het bijzonder **EN 809, EN 50 081-1, EN 50 082-1, EN 50 081-2, EN 50 082-2.**

E

Declaración de conformidad CE

Por la presente declaramos que esta unidad satisface las disposiciones pertinentes siguientes:

Directivas CE sobre máquinas 89/392/CEE, 91/368/CEE, 93/44/CEE, 93/68/CEE

Compatibilidad electro-magnética 89/336/CEE, 92/31/CEE, 93/68/CEE

Normas armonizadas utilizadas particularmente **EN 809, EN 50 081-1, EN 50 082-1, EN 50 081-2, EN 50 082-2.**

I

Dichiarazione di conformità CE

Con la presente si dichiara che le presenti pompe sono conformi alle seguenti direttive di armonizzazione

Direttiva Macchine CEE 89/392/CEE, 91/368/CEE, 93/44/CEE, 93/68/CEE

Compatibilità elettromagnetica 89/336/CEE, 92/31/CEE, 93/68/CEE

Norme armonizzate applicate, in particolare **EN 809, EN 50 081-1, EN 50 082-1, EN 50 081-2, EN 50 082-2.**

SF

CE-standardinmukai-suusseloste

Ilmoitamme täten, että tämä laite vastaa seuraavia asiaankuuluvia määräyksiä:

EY-konedirektiivit 89/392/ETY, 91/368/ETY, 93/44/ETY, 93/68/ETY

Sähkömagneettinen soveltuvuus 89/336/ETY, 92/31/ETY, 93/68/ETY

Käytetyt yhteensovitetut standardit, erityisesti **EN 809, EN 50 081-1, EN 50 082-1, EN 50 081-2, EN 50 082-2.**

S

EEC konformitets-deklaration

Härmed förklaras att denna maskin uppfyller följande bestämmelser:

EEC maskindirektiv 89/392/EEC i denna version, 91/368/EEC, 93/44/EEC, 93/68/EEC

Elektromagnetisk kompatibilitet 89/336/EEC i denna version, 92/31/EEC, 93/68/EEC

Tillämpade harmoniserade normer, särskilt: **EN 809, EN 50 081-1, EN 50 082-1, EN 50 081-2, EN 50 082-2.**

H

EK. azonossági nyilatkozat

Ezennel kijelentjük, hogy az agregát a megkívánt alanti feltételeknek megfelel:

EK-Gépirányelvek 89/392/EWG, 91/368/EWG, 93/44/EWG, 93/68/EWG

Elektromagnetikus Összeegyeztethetőség 89/336/EWG, 92/31/EWG, 93/68/EWG

Alkalmazott, harmonizált normák, különösen az **EN 809, EN 50 081-1, EN 50 082-1, EN 50 081-2, EN 50 082-2.**

GR **Δήλωση συμμόρφωσης με τους κανονισμούς CE**

Δηλώνουμε ότι το προϊόν αυτό ικανοποιεί τις ακόλουθες διατάξεις:

Οδηγίες CEE σχετικά με μηχανήματα 89/392/CEE, 91/368/CEE, 93/44/CEE, 93/68/CEE

Ηλεκτρομαγνητική συμβατότητα 89/336/CEE, 92/31/CEE, 93/68/CEE

Εναρμονισμένα χρησιμοποιούμενα πρότυπα, ιδιαίτερα **EN 809, EN 50 081-1, EN 50 082-1, EN 50 081-2, EN 50 082-2.**

CZ **Osvědčení o shodnosti s normami EU**

Prohlašujeme tímto, že toto zařízení odpovídá následujícím příslušným ustanovením:

Směrnice o strojírenském zařízení ES 89/392/EHS včetně dodatků, 91/368/EHS, 93/44/EHS, 93/68/EHS

Elektromagneticá snášenlivost 89/336/EHS včetně dodatků, 92/31/EHS, 93/68/EHS

Použité souhlasné normy, zejména: **EN 809, EN 50 081-1, EN 50 082-1, EN 50 081-2, EN 50 082-2.**

PL **Oświadczenie zgodności EC**

Niniejszym oświadczamy, że pompa odpowiada następującym właściwym dla niej dyrektywom:

Wytyczne dla przemysłu maszynowego EC 89/392/EEC w tej wersji, 91/368/EEC, 94/44/EEC, 93/68/EEC

Odporność elektromagnetyczna EC 89/336/EEC w tej wersji, 92/31/EEC, 93/68/EEC

Zastosowano normy zharmonizowane, w szczególności: **EN 809, EN 50 081-1, EN 50 082-1, EN 50 081-2, EN 50 082-2.**

RUS **Заявление о соответствии нормам, действующим в Европейском Сообществе**

Настоящим документом заявляем, что данная установка соответствует следующим постановлениям:

Директивы ЕС относительно машин и станков 89/392/ЦЕЕ, 91/368/ЦЕЕ, 93/44/ЦЕЕ, 93/68/ЦЕЕ

Электромагнитная совместимость 89/336/ЦЕЕ, 92/31/ЦЕЕ, 93/68/ЦЕЕ

Использовавшиеся гармонизированные стандарты и нормы, в частности **EN 809, EN 50 081-1, EN 50 082-1, EN 50 081-2, EN 50 082-2.**

DK **EF-overensstemmelseserklæring**

Det erklæres hermed, at dette udstyr er i overens-stemmelse med følgende bestemmelser:

EU maskindirektiver: 89/392/EØF i denne udgave, 91/368/EØF, 93/44/EØF, 93/68/EØF

Elektromagnetisk kompatibilitet: 89/336/EØF i denne udgave, 92/31/EØF, 93/68/EØF

Anvendte harmoniserede normer, især: **EN 809, EN 50 081-1, EN 50 082-1, EN 50 081-2, EN 50 082-2.**

N **EU-overensstemmelseserklæring**

Det erklæres herved at dette utstyret stemmer overens med følgende bestemmelser:

EU-direktiver for maskiner 89/392/EEC og følgende, 91/368/EEC, 93/44/EEC, 93/68/EEC

Elektromagnetisk kompatibilitet 89/336/EEC og følgende, 92/31/EEC, 93/68/EEC

Anvendte harmoniserte normer, i særdeleshet **EN 809, EN 50 081-1, EN 50 082-1, EN 50 081-2, EN 50 082-2.**

TR **Uygunluk Belgesi**

Aşağıdaki cihazların takibi standartlara vygun olduğunu temin ederiz:

AB-Makina Standartları 89/392/EWG i.d.F., 91/368/EWG, 93/44/EWG, 93/68/EWG

Elektromanyetik Uyumluluk 89/336/EWG i.d.F., 92/31/EWG, 93/68/EWG

Özellikle kullanılan Normlar **EN 809, EN 50 081-1, EN 50 082-1, EN 50 081-2, EN 50 082-2.**

i. V.

Quality Management

WILO

WILO AG
Nortkirchenstraße 100
44263 Dortmund · Germany

20116778.3

1. General Information

Installation and service by qualified personnel only!

1.1 Uses

The dewatering and dirty water submersible motor-driven pumps are used to automatically drain pits and shafts, to keep dry yards and cellars that are regularly under flood alert, to lower surface water, provided the waste water cannot drain into the sewage system due to the natural gradient.
The pumps are suitable for the conveyance of mildly polluted water, rain water and wash water.
Type TMW 32/11 HD is suitable for the conveyance of aggressive media, such as swimming pool water and condensate.
The pumps are not suitable for water with coarse impurities such as sand, fibres or faeces, explosive liquids or for use in potentially explosive areas.
The pumps can be installed permanently or so as to be transportable.
Submersible motor-driven pumps with less than 10 m of connecting cable are (to EN 60335) **only permitted for use within buildings**, in other words not in the open air.

The pump must **not** be used for pumping **drinking water**.
The pump may **not** be used to drain swimming pools if **people are in the water**.

1.2 Product data

1.2.1 Rating plate

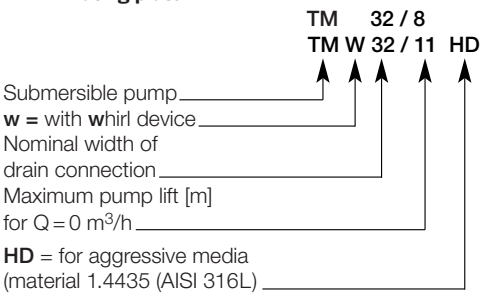

1.2.2 Connection and electrical data

	TM 32/7	TM 32/8	TMW 32/8	TMW 32/11	TMW 32/11 HD
Power consumption P_1 [kW]	see rating plate				
Nominal current 1~230 V [A]	see rating plate				
Speed [1/min]	2900				
Protection class at max. immersion depth	IP 68				
Insulation class	F				
Max. noise level at min. level	55 dbA				
Volume rate of flow Qmax. [m³/h]	7	10	10	15	15
Pump lift Hmax. [m]	7	8	7/8	10/11	10/11
Immersion depth (∇) max. [m]	3				
Max. temperature of material to be conveyed [°C] short-term up to 3 minutes	35 90				
Size of grains or solids [mm]	10				
Density of flow medium max. [kg/m³]					

Equipment	TM 32/7	TM 32/8	TMW 32/8	TMW 32/11	TMW 32/11 HD
Cable type	H05RNF	H07RNF	H05RNF	H05RNF	H07RNF
Cable length [m] / plug	3 / earthing contact	10 / earthing contact	3 / earthing contact	3 / earthing contact	10 / earthing contact
Float switch connected	●	–	●	●	●
Whirl device	–	–	●	●	●
Non-return device integrated	–	–	●	●	●
Pressure support DN: Pipe connection	–	–	Rp 1 ¼	Rp 1 ¼	Rp 1 ¼
Hose connection [mm]	⌀ 35	⌀ 35	–	–	–
Overall height L [mm] (up to connection)	294	294	293	323	323
Diameter of pump D [mm]	165				
Level control (fig. 1)					
Shaft dimensions Hmin [mm]	280	–	280	330	330
☐ Bmin [mm]	350 x 350	–	350 x 350	350 x 350	350 x 350
Max. Start-up level h ± 8 [mm]	237	–	250	280	280
Min. Cut-out level h1 ± 8 [mm]	50	–	50	50	50
Min. drainage level [mm]	18	18	30	30	30
Min. Float level h2 [mm]	14	–	14	14	14

When ordering spare parts, please give all the information on the pump rating plate.

2. Safety

These instructions contain important information which must be followed when installing and operating the pump. These operating instructions must therefore be read before assembly and commissioning by the installer and the responsible operator. Both the general safety instructions in the “Safety precautions” section and those in subsequent sections indicated by danger symbols should be carefully observed.

2.1 Danger symbols used in these operating instructions

Safety precautions in these operating instructions which, if not followed, could cause personal injury are indicated by the symbol:

,

when warning of electrical voltage with

The following symbol is used to indicate that by ignoring the relevant safety instructions, damage could be caused to the pump/machinery and its functions:

ATTENTION!

2.2 Staff training

The personnel installing the pump must have the appropriate qualifications for this work.

2.3 Risks incurred by failure to comply with the safety precautions

Failure to comply with the safety precautions could result in personal injury or damage to the pump or installation. Failure to comply with the safety precautions could also invalidate any claim for damages.

In particular, lack of care may lead to problems such as:

- Failure of important pump or machinery functions,
- Personal injury due to electrical, mechanical and bacteriological causes.

2.4 Safety precautions for the operator

Existing regulations for the prevention of accidents must be followed.

Dangers caused by electrical energy are to be excluded. Directives issued by the VDE [German Association of Electrical Engineers] and the local electricity supply companies are to be observed.

2.5 Safety information for inspection and assembly

The operator is responsible for ensuring that inspection and assembly are carried out by authorised and qualified personnel who have studied the operating instructions closely.
Work on the pump/machinery should only be carried out when the machine has been brought to a standstill.

2.6 Unauthorized modification and manufacture of spare parts

Alterations to the pump or installation may only be carried out with the manufacturer's consent. The use of original spare parts and accessories authorised by the manufacturer will ensure safety. The use of any other parts may invalidate claims invoking the liability of the manufacturer for any consequences.

2.7 Unauthorised operating methods

The operating safety of the pump or installation supplied can only be guaranteed if it is used in accordance with paragraph 1 of the operating instructions. The limiting values given in the catalogue or data sheet must neither be exceeded nor allowed to fall below those specified.

3. Transport and interim storage

ATTENTION! The pump may only be transported/suspended on the handle provided for transport. It is to be protected against mechanical damage and may not be exposed to temperatures outside the range 0 °C to +50 °C.

4. Product and accessory description

4.1 Pump description

The housing of the submersible motor-driven pump is made of plastics. The electric motor is protected against the pump chamber by a shaft seal ring to seal off the Motor against oil chamber and a mechanical seal to seal off the oil chamber against water.

The motor is cooled by the surrounding pumping medium.
The pump is mounted on the bottom of a shaft. The water is pumped into the channel a hose or a permanently installed pipe. The pumps of series TM / TMW operate automatically by means of a float switch which switches the pump on at a specific water level "h" (fig. 1) and off at a minimum water level "h1".

ATTENTION! Do not allow the pump to run dry. Dry running destroys the mechanical seal between pump and motor. Maintain minimum water level "h1" (see table 1.2.2 and fig. 1)!

The AC motors are equipped with a built-in **motor cut-out**, which switches the motor off if it overloads and automatically switches it back on again once it has cooled down.
The pumps have a vent hole between the bottom and top pump sections, so that during operation water (air) escapes through the slit in the suction strainer. This bypass prevents air from collecting underneath the flap trap, thereby guaranteeing the operational safety of the pump.

TMW: The pumps are equipped with built-in non-return devices.
For waste water with suspended and settlable solids, the submersible motor-driven pump was fitted with a whirl device on the suction strainer. Precipitating impurities are constantly whirled up in the suction area of the pump and pumped out with the water. This largely prevents the pump shaft from silting up with all the unfavourable consequences such as pump blockages and bad smells.

TM: TM pumps are **not** equipped with whirl device and non-return device.

The individual equipment variations can be found in the table under 1.2.2.
The pumps are operated by connecting the earthing-pin plug.
If the dirty water drain does not permit interruption, a 2nd pump (automatic reserve pump) in connection with the required switchbox (accessory) increases operational safety if there is a fault in the 1st pump.

4.2 Products delivered
– Submersible motor-driven pump complete,
– Installation and operating instructions.

4.3 Accessories
Accessories must be ordered separately.
– Non-return device Rp 1¼ with drain valve
– ER 1-A switchbox for the automatic transmitter-dependent control of a submersible motor-driven pump up to motor power P_2 = 3 kW,
– SK 530 switchbox for the automatic transmitter-dependent control of two submersible motor-driven pumps up to motor power P_2 = 3 kW,
– Small alarm switching device KAS, off-line,
– Alarm switching device DrainAlarm 2, off-line.

5. Assembly/Installation

5.1 Assembly
– Site and shaft for the pump must be frost-free.
– In the case of permanent installation the bottom of the shaft must be level and free from coarse impurities (e.g. rubble, earth).

ATTENTION! The pump may not be carried or hung by the connecting cable or float. A rope should be used to lower and locate the pump.

– The diameter of the compressed-air piping (pipe/hose connection) may not be smaller than the delivery connection of the pump. To avoid pressure losses, it is recommended to select a nominal width greater for the pipe connection.
– To protect against possible reflux from the public conduit the compressed-air piping is to be fed over the locally established reflux level (generally street level) in a bend.
– If the TM pump is permanently installed, a non-return device (accessory) is required.
– The pipe connections to the pressure pipe connections of the pump are to be sealed with Teflon tape.

ATTENTION! Constant leaks in this area may destroy the built-in non-return device and screw joint.

– The pump is designed such that it can be fully submerged in the pumping medium. The level control for the start-up/cut-out level can be altered via the free float cable.

ATTENTION! The minimum level (see fig. 1 and table 1.2.2) may not be fallen short of.

5.2 Electrical connection

Electrical connection should be made by a qualified electrician. Current national regulations must be observed (e.g. VDE regulations in Germany).
– Check the mains current and voltage.
– Ensure compliance with the data on the rating plate.
– Mains voltage see rating plate.
– Mains fuse: 10 A, time-lag.
– Observe earthing regulations.
– It is recommended that a **residual current operating device** to be provided by the customer be installed for a tripping current of 30 mA (for installation in open air directive!).
– The pump is connected to a socket outlet with earthing contact, to be provided by the customer. To connect the pump to a switching device the earthing-pin plug is cut and the connecting cable wired as follows:
brown wire to "**L1**", blue wire to "**N**", yellow-green wire to "**PE**".
– The socket outlet and/or switchbox are to be installed **so as to be flood-proof** and in a dry area.
– Pumps intended for use in or on swimming pools, garden ponds and similar places must have a supply cable to the mains which is no lighter than rubber-insulated flexible cables with identification symbol H07 RN-F (245 IEC 66) to EN 60335.
– In accordance with EN 60335, submersible motor-driven pumps with less than 10 m of connecting cable are only permitted for use within buildings, in other words not for operation in the open air.

6. Operation

The pump may **not** be used to drain swimming pools if **people are in the water**.

6.1 Setting the pump
– The unhindered movement of the float switch must be guaranteed at all costs. The switch must switch the pump off before the pump's suction openings can draw in air. See table for minimum water level.

– After the shaft has been filled and the shut-off valve on the pressure side opened (if available), the pump starts up automatically if the switching level “h” is reached and cuts out as soon as the cut-out level “h1” responds.

ATTENTION! Do not allow the pump to run dry.

– **Switching level adjustment of the float switch**
The switching level (start-up point) can be altered via the free float cable by moving the cable within the retaining eye.
The fault-free operation of the level control is guaranteed if the data given in table 1.2.2 and fig. 1 are observed.
A small degree of water penetration (lateral slit between suction strainer and housing) when level “h2” is reached is normal and necessary to ensure the operational safety of the pump.
– Do not direct the jet of water to be fed into the shaft at the suction strainer of the pump. Entrained air can prevent the operating pump from functioning if the vent hole in the housing is blocked.
– The maximum quantity of water feeding into the shaft may not exceed the pump’s capacity. Monitor the shaft during commissioning.
– To increase the required capacity (by approx. 16 % of the delivery head) the whirl device system of the TMW pumps can be shut down as follows (fig. 2):
  – Pull the mains plug,
  – Remove pump from the shaft,
  – Remove the 4 screws (pos. 2) below the suction basket,
– Remove the whirl device (pos. 1), rotate by 180° and secure again with the 4 screws,
– lower pump again and start up.

7. Maintenance

Pull the mains plug before checking the pump!

The pump is almost maintenance free.
To prevent the pump from becoming blocked due to long periods of inactivity, its performance reliability should be checked at regular intervals (every 2 months) by lifting the float out manually and running the pump for a short period.
A small amount of wear on the shaft sealing ring and the mechanical seal is unavoidable and is accelerated by sandy water.
A defective mechanical seal can lead to the liquid becoming contaminated by oil leaking from the oil chamber.
The pump should therefore be serviced after approx. 2000 operating hours by a specialist or Wilo Customer Services, mainly in order to check the seals.
The encapsulated motor may only be opened by specialists or by Wilo Customer Services.

8. Problems, Causes and Remedies

Problem	Cause	Remedies
Pump does not run or stops during the operation	Power interrupted	check fuses, cables and connections
	Motor safety switch disengaged	Allow pump to cool, starts again automatically
	Fluid temperature too high	Allow to cool
	Pump silted up or blocked	Disconnect the pump from the mains and remove it from the shaft Dismantle suction strainer / whirl device, rinse suction strainer / impeller under running water.
Pump does not start up / cut out	Float switch blocked or cannot move freely	Check float switch and ensure it can move
Pump does not pump	Air in the pump (vent hole / slit clogged up)	Disconnect the pump from the mains and remove it from the shaft Dismantle suction strainer / whirl device, rinse suction strainer / vent slit under running water. Rinse vent hole in housing.
	Air trapped in the unit cannot escape	Vent / if necessary drain unit
		Check cut-out level “h1”
	Water level below the suction opening	If possible submerge pump further (observe cut-out level)
	Non-return device jammed in pressure support	Check operation
	Hose bent / shut-off valve closed	Straighten bend in hose / open shut-off valve
Capacity drops during operation	Suction strainer clogged up / impeller blocked	Disconnect the pump from the mains and remove it from the shaft Dismantle suction strainer/ whirl device, rinse suction strainer / impeller under running water.

If the fault cannot be remedied, please contact your plumbing and heating specialist or your nearest Wilo customer services or representative.

9. Disassembly and assembly

Disconnect power supply!
Remove the mains plug!

9.1 Disassembly

The suction strainer and whirl device are to be cleaned as required. It may also become necessary to clean the impeller. The following assembly stages are to be carried out:

TMW:

- The whirl device is screwed to the suction strainer.
- Loosen 4 screws (ø 3.5 x 14),
- Remove whirl device,
- The suction strainer is screwed to the pump housing,
- Loosen 4 screws (ø 4 x 60),
- Remove suction strainer, handle O-ring (ø 155 x ø 2) between suction strainer / pump housing and O-ring (ø 14 x ø 2) in the bypass hole (necessary for the whirl function) with care.

TM:

- The suction strainer is screwed to the pump housing,
- Loosen 4 screws (ø 4 x 60),
- Remove suction strainer, handle O-ring (ø 155 x ø 2) between suction strainer / pump housing with care.

9.2 Assembly

All disassembled parts and the impeller are to be cleaned and checked for wear and tear.
The impeller must turn freely.
Damaged or worn parts are to be replaced with spare parts.
We recommend always using new seals.
Assembly takes place in the reverse order to disassembly.

Subject to technical alterations!

Notizen
Notes
Notes
Appunti

WILO AG
Nortkirchenstraße 100
44263 Dortmund
Germany
T +49 231 4102-0
F +49 231 4102-7363
www.wilo.com

Wilo – International (Subsidiaries)

Argentina
WILO SALMSON
Argentina S.A.
C1270ABE Ciudad
Autónoma de Buenos
Aires
T +54 11 43015955
info@salmon.com.ar

Austria
WILO Handelsges.
m.b.H.
1230 Wien
T +43 5 07507-0
office@wilo.at

Azerbaijan
WILO Caspian LLC
1065 Baku
T +994 12 5962372
info@wilo.az

Belarus
WILO Bel OOO
220035 Minsk
T +375 17 2503393
wilobel@wilo.by

Belgium
WILO SA/NV
1083 Ganshoren
T +32 2 4823333
info@wilo.be

Bulgaria
WILO Bulgaria Ltd.
1125 Sofia
T +359 2 9701970
info@wilo.bg

Canada
WILO Canada Inc.
Calgary, Alberta T2A 5L4
T +1 403 2769456
bill.lowe@wilo-na.com

China
WILO China Ltd.
101300 Beijing
T +86 10 80493900
wilobj@wilo.com.cn

Croatia
WILO Hrvatska d.o.o.
10090 Zagreb
T +38 51 3430914
wilo-hrvatska@wilo.hr

Czech Republic
WILO Praha s.r.o.
25101 Cestlice
T +420 234 098711
info@wilo.cz

Denmark
WILO Danmark A/S
2690 Karlslunde
T +45 70 253312
wilo@wilo.dk

Estonia
WILO Eesti OÜ
12618 Tallinn
T +372 6509780
info@wilo.ee

Finland
WILO Finland OY
02330 Espoo
T +358 207401540
wilo@wilo.fi

France
WILO S.A.S.
78390 Bois d'Arcy
T +33 1 30050930
info@wilo.fr

Great Britain
WILO (U.K.) Ltd.
DE14 2WJ Burton-
Upon-Trent
T +44 1283 523000
sales@wilo.co.uk

Greece
WILO Hellas AG
14569 Anixi (Attika)
T +302 10 6248300
wilo.info@wilo.gr

Hungary
WILO Magyarország
Kft
2045 Törökbálint
(Budapest)
T +36 23 889500
wilo@wilo.hu

Ireland
WILO Engineering Ltd.
Limerick
T +353 61 227566
sales@wilo.ie

Italy
WILO Italia s.r.l.
20068 Peschiera
Borromeo (Milano)
T +39 25538351
wilo.italia@wilo.it

Kazakhstan
WILO Central Asia
050002 Almaty
T +7 3272 785961
in.pak@wilo.kz

Korea
WILO Pumps Ltd.
621-807 Gimhae
Gyeongnam
T +82 55 3405800
wilo@wilo.co.kr

Latvia
WILO Baltic SIA
1019 Riga
T +371 7 145229
mail@wilo.lv

Lebanon
WILO SALMSON
Lebanon
12022030 El Metn
T +961 4 722280
wsl@cyberia.net.lb

Lithuania
WILO Lietuva UAB
03202 Vilnius
T +370 5 2136495
mail@wilo.lt

The Netherlands
WILO Nederland b.v.
1948 RC Beverwijk
T +31 251 220844
info@wilo.nl

Norway
WILO Norge AS
0901 Oslo
T +47 22 804570
wilo@wilo.no

Poland
WILO Polska Sp. z.o.o.
05-090 Raszyn
T +48 22 7026161
wilo@wilo.pl

Portugal
Bombas Wilo-Salmson
Portugal Lda.
4050-040 Porto
T +351 22 2080350
bombas@wilo.pt

Romania
WILO Romania s.r.l.
077040 Com. Chiajna
Jud. Ilfov
T +40 21 3170164
wilo@wilo.ro

Russia
WILO Rus ooo
123592 Moscow
T +7 495 7810690
wilo@orc.ru

Saudi Arabia
WILO ME - Riyadh
Riyadh 11465
T +966 1 4624430
wshoula@wataniaind.com

Serbia and Montenegro
WILO Beograd d.o.o.
11000 Beograd
T +381 11 2851278
office@wilo.co.yu

Slovakia
WILO Slovakia s.r.o.
82008 Bratislava 28
T +421 2 45520122
wilo@wilo.sk

Slovenia
WILO Adriatic d.o.o.
1000 Ljubljana
T +386 1 5838130
wilo.adriatic@wilo.si

South Africa
Salmson South Africa
1610 Edenvale
T +27 11 6082780
errol.cornelius@
salmson.co.za

Spain
WILO Ibérica S.A.
28806 Alcalá de
Henares (Madrid)
T +34 91 8797100
wilo.iberica@wilo.es

Sweden
WILO Sverige AB
35246 Växjö
T +46 470 727600
wilo@wilo.se

Switzerland
EMB Pumpen AG
4310 Rheinfelden
T +41 61 8368020
info@emb-pumpen.ch

Taiwan
WILO-EMU
Taiwan Co. Ltd.
110 Taipeh
T +886 227 391655
nelson.wu@
wiloemutaiwan.com.tw

Turkey
WILO Pompa Sistemleri
San. ve Tic. A.Ş.
34530 Istanbul
T +90 216 6610211
wilo@wilo.com.tr

Ukraina
WILO Ukraina t.o.w.
01033 Kiew
T +38 044 2011870
wilo@wilo.ua

Vietnam
Pompes Salmson
Vietnam
Ho Chi Minh-Ville
Vietnam
T +84 8 8109975
nkm@salmson.com.vn

United Arab Emirates
WILO ME - Dubai
Dubai
T +971 4 3453633
info@wilo.com.sa

USA
WILO-EMU USA LLC
Thomasville,
Georgia 31792
T +1 229 5840097
info@wilo-emu.com

USA
WILO USA LLC
Melrose Park,
Illinois 60160
T +1 708 3389456
mike.easterley@
wilo-na.com

Wilo – International (Representation offices)

Algeria
Bad Ezzouar, Dar El
Beida
T +213 21 247979
chabane.hamdad@
salmson.fr

Bosnia and Herzegovina
71000 Sarajevo
T +387 33 714510
zeljko.cvjetkovic@
wilo.ba

Macedonia
1000 Skopje
T +389 2 3122058
valerij.vojneski@
wilo.com.mk

Rep. Mongolia
Ulaanbaatar
T +976 11 314843
wilo@magicnet.mn

Turkmenistan
744000 Ashgabad
T +993 12 345838
wilo@wilo-tm.info

March 2008

Armenia
375001 Yerevan
T +374 10 544336
info@wilo.am

Georgia
0177 Tbilisi
T +995 32317813
info@wilo.ge

Moldova
2012 Chisinau
T +373 2 223501
sergiu.zagurean@wilo.md

Tajikistan
734025 Dushanbe
T +992 37 2232908
farhod.rahimov@wilo.tj

Uzbekistan
700046 Taschkent
sergej.arakelov@wilo.uz

WILO AG
Nortkirchenstraße 100
44263 Dortmund
Germany
T 0231 4102-0
F 0231 4102-7363
wilo@wilo.de
www.wilo.de

Wilo-Vertriebsbüros in Deutschland

G1 Nord
WILO AG
Vertriebsbüro Hamburg
Beim Strohhause 27
20097 Hamburg
T 040 5559490
F 040 55594949
hamburg.anfragen@wilo.de

G2 Ost
WILO AG
Vertriebsbüro Berlin
Juliusstraße 52–53
12051 Berlin-Neukölln
T 030 6289370
F 030 62893770
berlin.anfragen@wilo.de

G3 Sachsen/Thüringen
WILO AG
Vertriebsbüro Dresden
Frankenring 8
01723 Kesselsdorf
T 035204 7050
F 035204 70570
dresden.anfragen@wilo.de

G4 Südost
WILO AG
Vertriebsbüro München
Landshuter Straße 20
85716 Unterschleißheim
T 089 4200090
F 089 42000944
muenchen.anfragen@wilo.de

G5 Südwest
WILO AG
Vertriebsbüro Stuttgart
Hertichstraße 10
71229 Leonberg
T 07152 94710
F 07152 947141
stuttgart.anfragen@wilo.de

G6 Rhein-Main
WILO AG
Vertriebsbüro Frankfurt
An den drei Hasen 31
61440 Oberursel/Ts.
T 06171 70460
F 06171 704665
frankfurt.anfragen@wilo.de

G7 West
WILO AG
Vertriebsbüro Düsseldorf
Westring 19
40721 Hilden
T 02103 90920
F 02103 909215
duesseldorf.anfragen@wilo.de

Kompetenz-Team Gebäudetechnik

WILO AG
Nortkirchenstraße 100
44263 Dortmund
T 0231 4102-7516
T 01805 R•U•F•W•I•L•O*
7•8•3•9•4•5•6
F 0231 4102-7666

Erreichbar Mo–Fr von 7–18 Uhr.

- Antworten auf
  - Produkt- und Anwendungsfragen
  - Liefertermine und Lieferzeiten
- Informationen über Ansprechpartner vor Ort
- Versand von Informationsunterlagen

Kompetenz-Team Kommune Bau + Bergbau

WILO EMU GmbH
Heimgartenstraße 1
95030 Hof
T 09281 974-550
F 09281 974-551

Werkskundendienst Gebäudetechnik Kommune Bau + Bergbau Industrie

WILO AG
Nortkirchenstraße 100
44263 Dortmund
T 0231 4102-7900
T 01805 W•I•L•O•K•D*
9•4•5•6•5•3
F 0231 4102-7126

Erreichbar Mo–Fr von 7–17 Uhr.
Wochenende und feiertags 9–14 Uhr elektronische Bereitschaft mit Rückruf-Garantie!

- Kundendienst-Anforderung
- Werksreparaturen
- Ersatzteilfragen
- Inbetriebnahme
- Inspektion
- Technische Service-Beratung
- Qualitätsanalyse

Wilo-International

Österreich
Zentrale Wien:
WILO
Handelsgesellschaft mbH
Eitnergasse 13
1230 Wien
T +43 5 07507-0
F +43 5 07507-15

Vertriebsbüro Salzburg:
Gnigler Straße 56
5020 Salzburg
T +43 5 07507-13
F +43 5 07507-15

Vertriebsbüro Oberösterreich:
Trattnachtalstraße 7
4710 Grieskirchen
T +43 5 07507-26
F +43 5 07507-15

Schweiz
EMB Pumpen AG
Gerstenweg 7
4310 Rheinfelden
T +41 61 8368020
F +41 61 8368021

Standorte weiterer Tochtergesellschaften

Argentinien, Aserbaidschan, Belarus, Belgien, Bulgarien, China, Dänemark, Estland, Finnland, Frankreich, Griechenland, Großbritannien, Irland, Italien, Kanada, Kasachstan, Korea, Kroatien, Lettland, Libanon, Litauen, Niederlande, Norwegen, Polen, Portugal, Rumänien, Russland, Saudi-Arabien, Schweden, Serbien und Montenegro, Slowakei, Slowenien, Spanien, Südafrika, Taiwan, Tschechien, Türkei, Ukraine, Ungarn, Vereinigte Arabische Emirate, Vietnam, USA

Die Adressen finden Sie unter **www.wilo.de** oder **www.wilo.com**.

* 14 Cent pro Minute aus dem deutschen Festnetz der T-Com. Bei Anrufen aus Mobilfunknetzen sind Preisabweichungen möglich.

Stand Januar 2008