Nom Société:
Créé par:
Téléphone:

Date:

Position	Quantité	Description
	1	**MOG.09.1.2**

Note ! La photo produit peut différer du produit réel

Référence: 97901124

Supplied as complete unit ready for installation, the Multilift consist of a fully integrated collecting tank with grinder pump and submersible motor mounted on the collecting tank and a pre-wired Controller incl. a level sensor. (Non-return valves and discharge pipes are available as accessories)

The fully integrated collecting tank has all necessary ports for the connection of inlet pipe, discharge pipe, vent pipe and a manually operated diaphragm pump (accessory).

The collecting tank contains 7 inlet sockets
around it's shape. The back inlet DN100
is placed on a patented inlet disk to connect all inlet pipe levels (centre) between 180 and 315mm stepless. DN100 and DN50 inlet sockets on each side. DN150, DN50 sockets on the top of the tank.

Multilift corrosion free polyethylen collecting tanks are gas- and odour-proof as well as watertight , reduction of residual water and less sedimentation by chamfered bottom design.

The grinder pump with Vortex impeller, submersible motor, oil chamber with physiological harmless oil filling between a mechanical cartridge shaft seal. Pump discharge with inner thread of 1 1/4 inch.

An LC221 controller with microprocessor is equipped with display for full monitoring possibilities. The pump and sensor are connected to the controller with 10m cable and tube length. The power supply cable is 1,5m with plug (incl. phase inverter for 3 phase motor)

Contactless, piezo resistive pressure sensor pluggable inside the cabinet, monitored by controller, accurate to the

millimetre shown on display. Blockage free pressure tube inside the tank without movable parts inside wastewater.

The controller offer thermal motor protection and monitoring of pump operation. The thermal motor protection consists of thermal switches in the winding.

Controller functions:
• on/off control of one grinder pump based on a continuous signal from a piezo-resistive sensor
• motor protection via motor-protective circuit breaker and/or current measurement as well as connection of thermal switches.
• dry running motor protection via run-time limitation with a following emergency operation
• 24h automatic test runs during long periods of
inactivity
• setting of delay times:
  - stopping delay (time from the stop level is reached till the pumped is stopped)

Position	Quantité	Description

- starting delay (time from the start level is reached till the pumped is started)
- alarm delay (time from a fault appears till an alarm is

indicated) to prevents short-time high-level alarm in case of temporary high inflow to the tank.

• automatic current measurement for alarm indications
• operating indication of:
- operating mode (auto, manual)
- operating hours
- impulses (number of starts)
- highest measured motor current

• alarm indication of:
- pump status (running, fault)
- phase-sequence fault and missing phase
- thermal-switch failure
- high-water alarm
- time for service/maintenance (selectable).

• selection of automatic alarm resetting
• fault log of up to 20 alarms
• selection between different start levels
• selection of connected sensor type
• calibration of sensor (preset)
• selection of maintenance interval (0, 3, 6 or 12 months).

As standard, the LC 221 has
4 potential-free outputs for:
– pump running
– pump failure
– high water-level alarm
– common fault.
6 digital inputs for the following functions:
– connecting a pressure sensor board (pre-assembled)
– connecting an analogue sensor (4-20mA or 0-5V)
– connecting up to four level switches or pressure switches instead of analogue sensor
– connecting a separate level switch to be used for flood
detection outside the Multilift. Lifting stations are often
installed in a sump inside the basement - the lowest point in the building. In case of e.g. groundwater inflow or water pipe burst, an alarm will be indicated by the controller.
– connecting an external alarm reset
– connecting the thermal switch of the motor.

The Multilift range is designed due to the standard EN12050-1, approved and monitored by external institute LGA. Further approvals are VDE, GHOST, CB, EMV

Technique:

Type de roue mobile:	SYST. GRINDER

Matériaux:

Joint:	SIC/SIC

Liquide:

Température liquide maximum:	40 °C

Donnée électrique:

Nombre de pôles:	2
Condensateur de fontionnement:	150 µF
Puissance absorbée - P1:	1.4 kW
Puissance nominale - P2:	0.9 kW
Fréquence d'alimentation:	50 Hz
Tension nominale:	1 x 230 V

Nom Société:
Créé par:
Téléphone:

Date:

Position	Quantité	Description
		Tolérance tension: +10/-10 % Méthode de démarrage: direct Nbre max. de démarrages par heure: 60 Courant nominal: 6.2 A Cos phi - Facteur de puissance: 0,99 Vitesse nominale: 2890 mn-1 Rendement moteur à pleine charge: 71 % Capacité Condensateur - Fonctionnement: 150 µF Indice de protection (IEC 34-5): IP68 Classe d'isolement (IEC 85): F Type de fiche câble: SCHUKO Câble principal: 1.5 m **Commandes:** Type de coffret: LC221.1 **Réservoir:** Volume total du (des) réservoir(s): 93 l Volume effectif total du réservoir avec entrée 180mm: 23 l Volume effectif total du réservoir avec entrée 250mm: 37 l Total effective volume of collecting tank at 315 mm inlet: 50 l

Nom Société:
Créé par:
Téléphone:

Date:

97901124 MOG.09.1.2 50 Hz

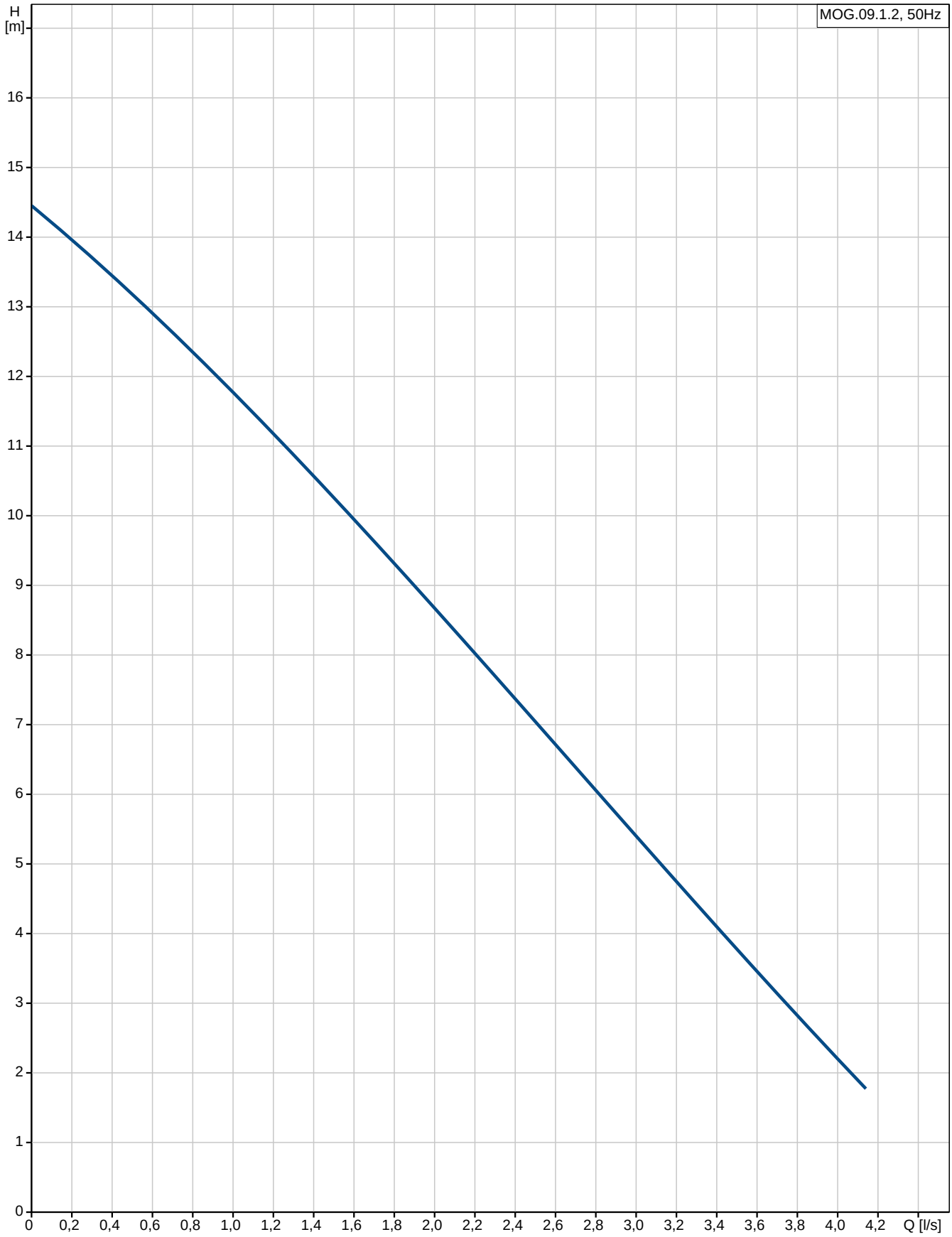

Nom Société:
Créé par:
Téléphone:

Date:

Description	Valeur
Information générale:	
Nom produit:	MOG.09.1.2
Position	
Code article:	97901124
Nombre EAN::	5710626081240
Prix:	Sur demande
Technique:	
Débit maxi.:	4.1 l/s
Pression maxi:	14.4 m
Type de roue mobile:	SYST. GRINDER
Matériaux:	
Joint:	SIC/SIC
Liquide:	
Température liquide maximum:	40 °C
Donnée électrique:	
Nombre de pôles:	2
Condensateur de fontionnement:	150 µF
Puissance absorbée - P1:	1.4 kW
Puissance nominale - P2:	0.9 kW
Fréquence d'alimentation:	50 Hz
Tension nominale:	1 x 230 V
Tolérance tension:	+10/-10 %
Méthode de démarrage:	direct
Nbre max. de démarrages par heure:	60
Courant nominal:	6.2 A
Cos phi - Facteur de puissance:	0,99
Vitesse nominale:	2890 mn-1
Rendement moteur à pleine charge:	71 %
Capacité Condensateur - Fonctionnement:	150 µF
Indice de protection (IEC 34-5):	IP68
Classe d'isolement (IEC 85):	F
Protection moteur:	Ipsotherme
Câble du moteur:	10 m
Type câble:	H07RN-F
Type de fiche câble:	SCHUKO
Câble principal:	1.5 m
	H05 VV-F
Commandes:	
Type de coffret:	LC221.1
Mode de fonctionnement:	S3-35%, 1MIN
Réservoir:	
Volume total du (des) réservoir(s):	93 l
Volume effectif total du réservoir avec entrée 180mm:	23 l
Volume effectif total du réservoir avec entrée 250mm:	37 l
Total effective volume of collecting tank at 315 mm inlet:	50 l

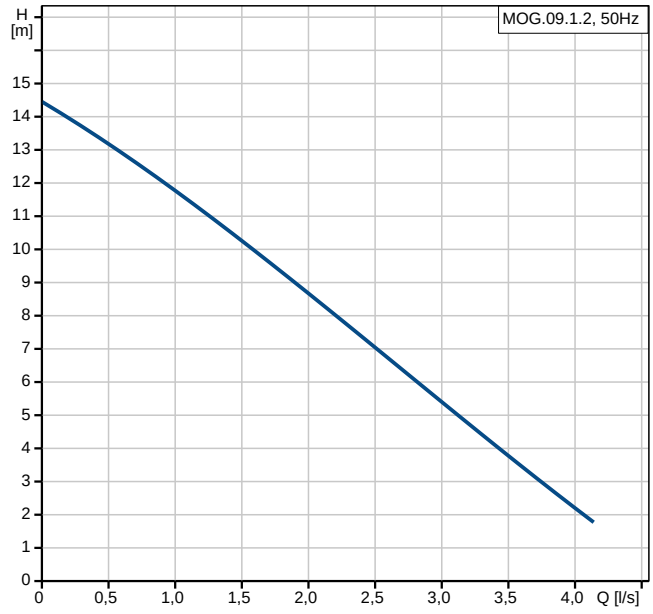

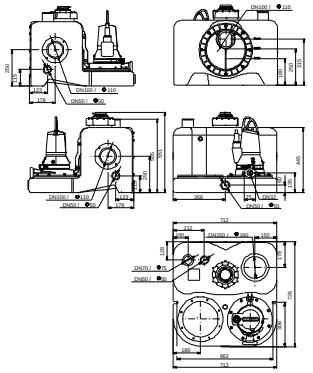

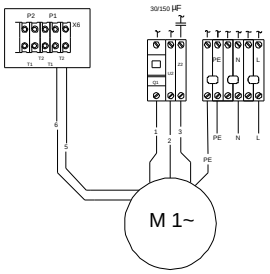

Nom Société:
Créé par:
Téléphone:

Date:

97901124 MOG.09.1.2 50 Hz

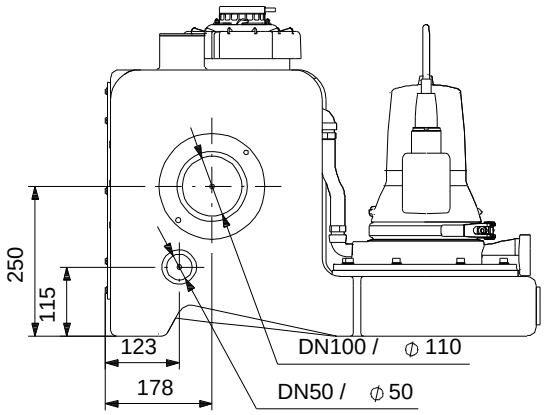

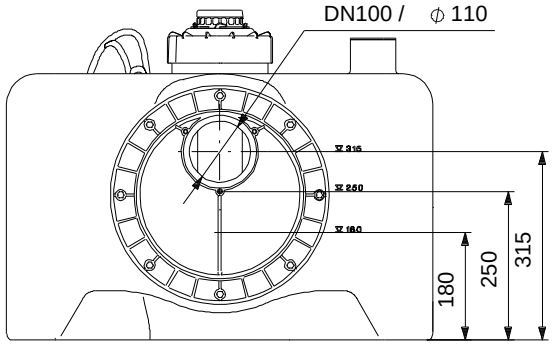

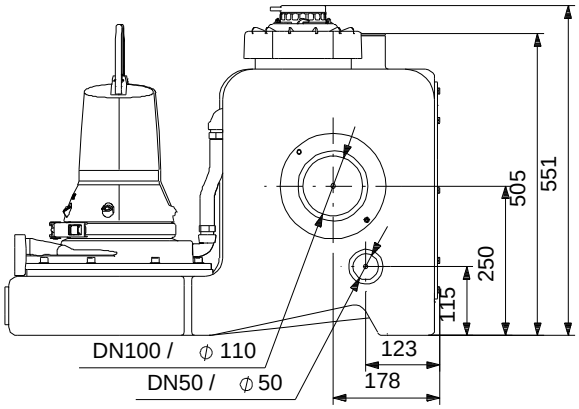

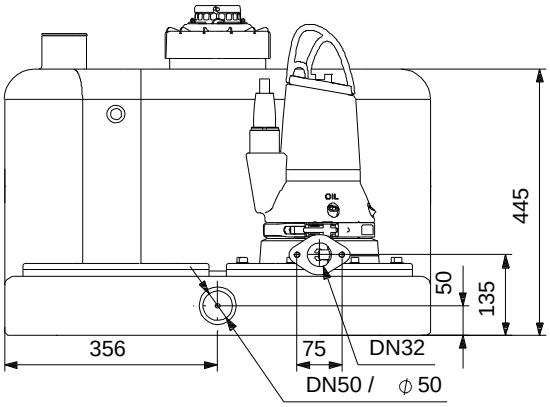

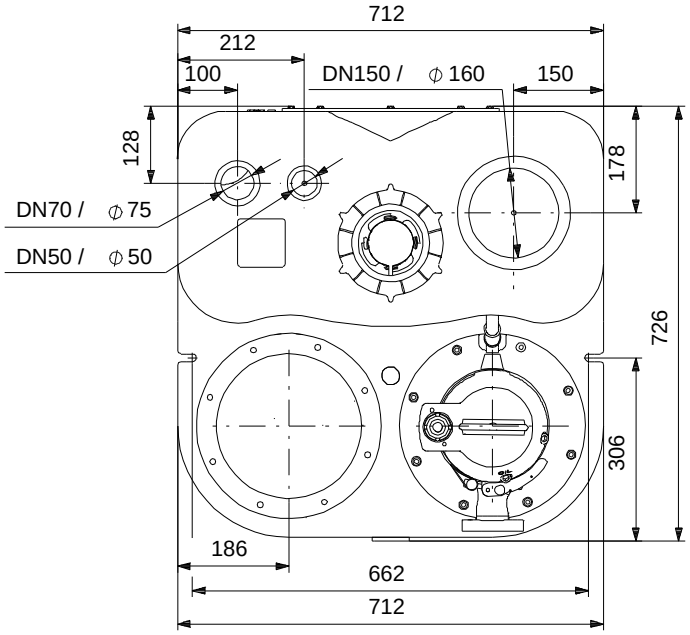

Remarque:toutes les unités sont en [mm] à moins que d'autres unités soient spécifiées.
Mise en garde: ce dessin d'encombrement simplifié ne montre pas tous les détails.