BLANCO

# BLANCO FELISA HD

Safety and hygiene
BLANCO mixer taps

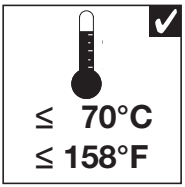


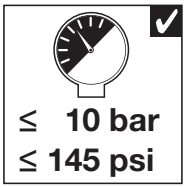

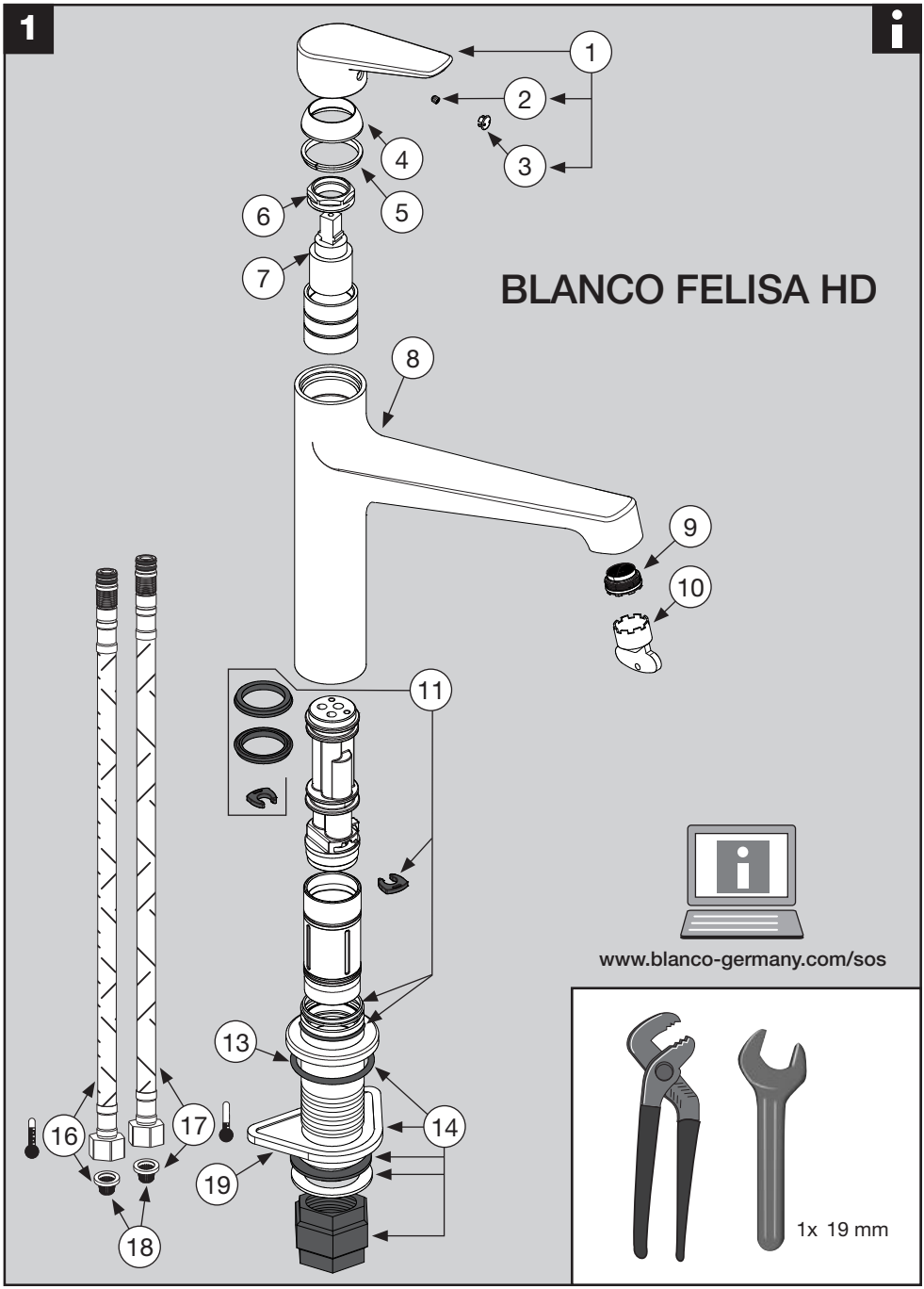
1
1
2
3
4
5
6
7
8
9
10
11
13
14
16
17
18
19
BLANCO FELISA HD
www.blanco-germany.com/sos
1x 19 mm

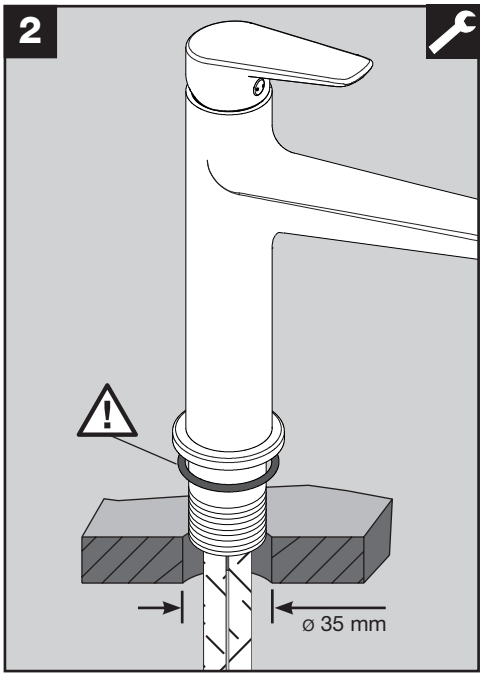
2
ø 35 mm

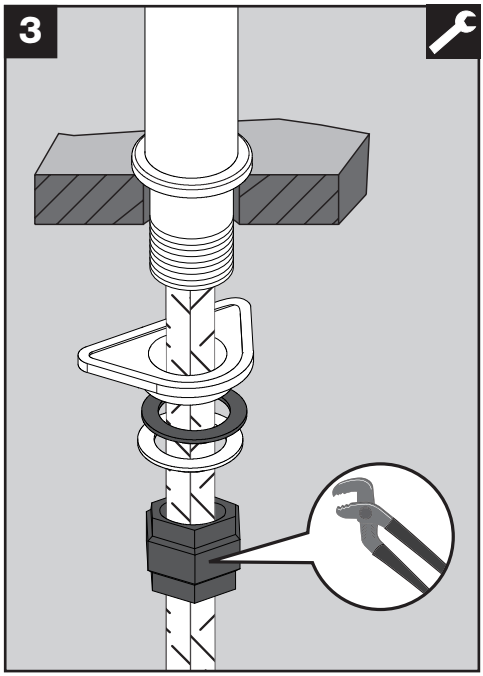
3

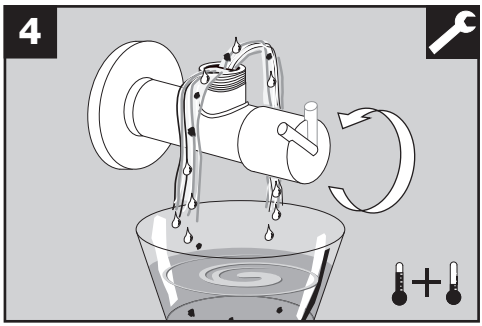
4

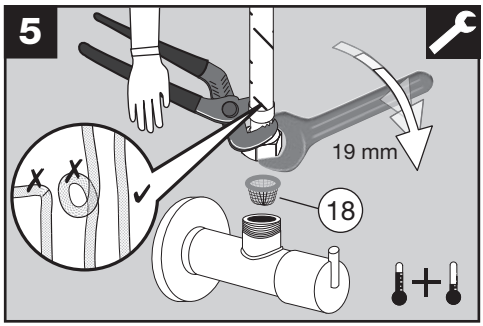
5
19 mm
18

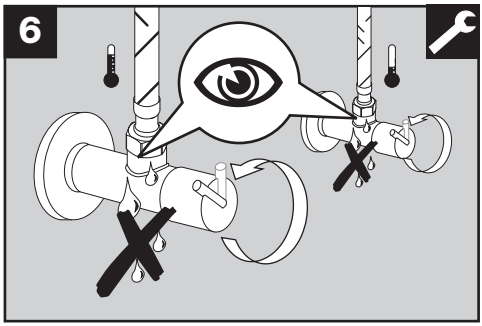
6

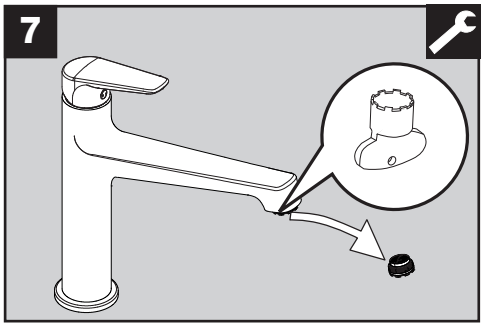
7

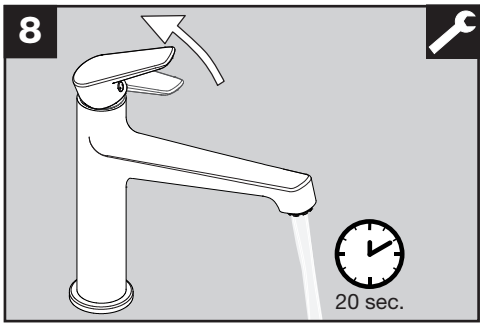


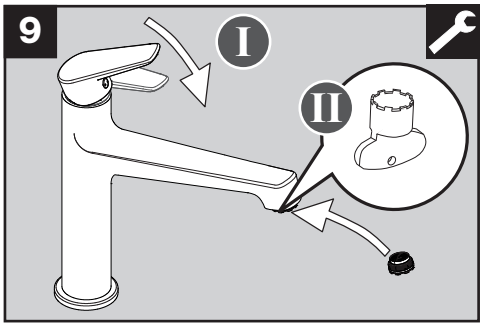

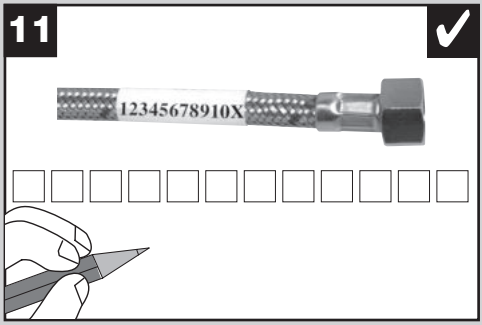


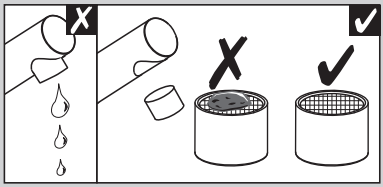

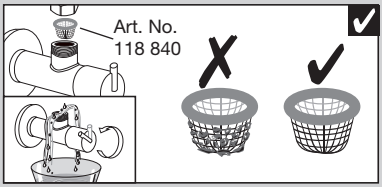


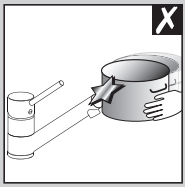

BLANCO

BLANCO GmbH + Co KG
Service
Tel.: +49 7045 44-81 419
info@blanco-germany.com
www.blanco-germany.com

121 180 04/2015