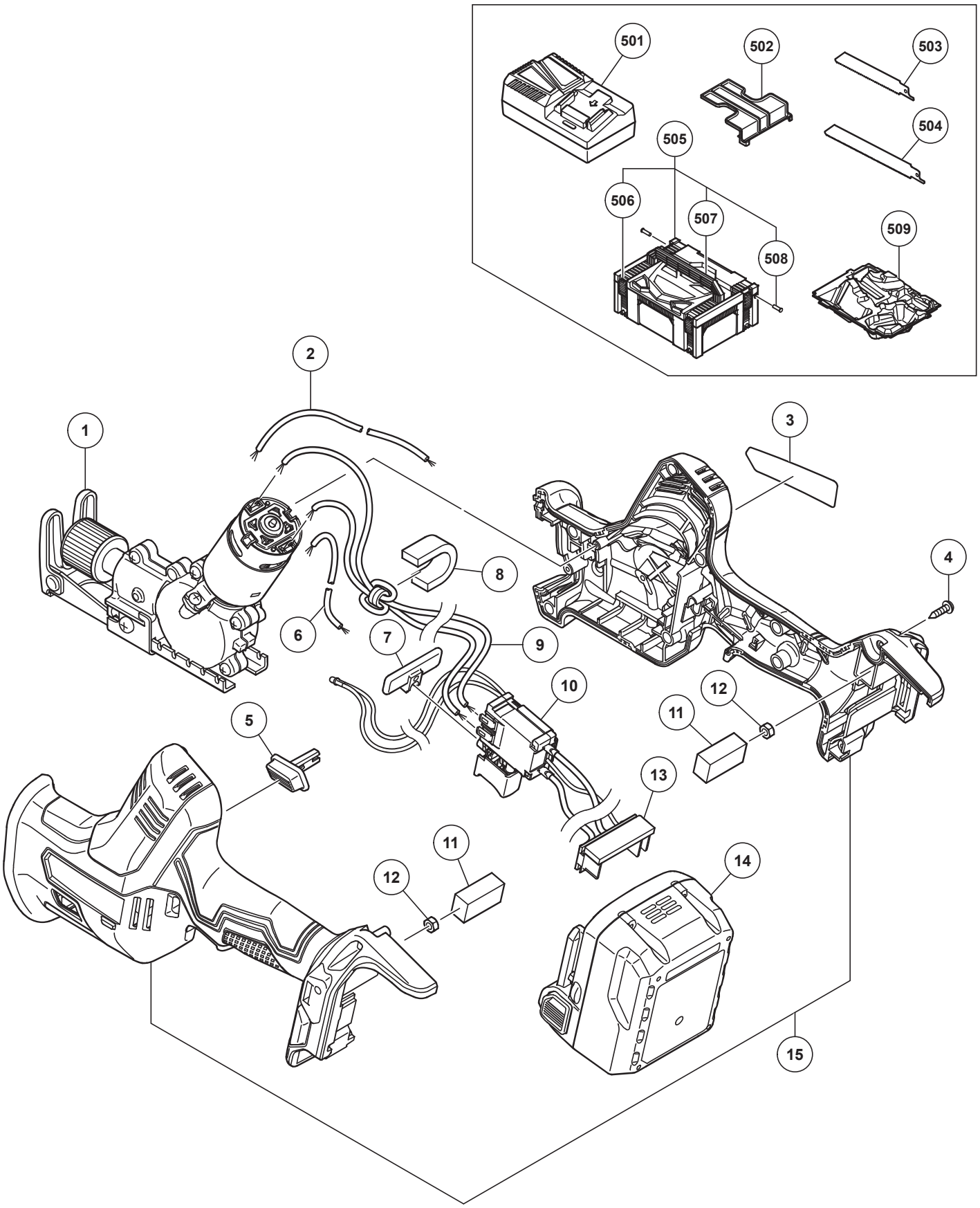

MODEL
CR18DA

Rev.1

ITEM NO.	CODE NO.	DESCRIPTION	NO. USED	REMARKS
1	376379	GEAR BOX	1	
*2	376553	INTERNAL WIRE (BLACK) L110	1	FOR CHN, UAE, THA, SIN, MAL, IND
3		NAME PLATE	1	
4	313687	TAPPING SCREW (W/FLANGE) D3 X 16 (BLACK)	9	
5	376377	LOCKING KNOB	1	
6	376552	INTERNAL WIRE (RED) L105	1	FOR CHN, UAE, THA, SIN, MAL, IND
7	329548	PUSHING BUTTON (A)	1	
*8	375921	SUPPORT (D)	1	FOR EUROPE, GBR, AUS, NZL
*9	376554	INTERNAL WIRE FERRITE SET	1	FOR EUROPE, GBR, AUS, NZL
10	376380	DC-SPEED CONTROL SWITCH	1	
11	328644	PACKING	2	
12	327002	LOCK NUT M4 (BLACK)	2	
13	331399	BATTERY TERMINAL	1	
14	376029	BATTERY BSL 1850C (EUROPE, AUS, NZL)	2	INCLUD. 502
15	376378	HOUSING (A).(B) SET	1	
STANDARD ACCESSORIES				
501		CHARGER (MODEL UC18YFSL)	1	
502	329897	BATTERY COVER	1	
503	958185	SABER SAW BLADES NO. 5 (5 PCS.)	1	
504	318617	SABER SAW BLADES NO. 107 150L P.24 (5 PCS.)	1	
505	336471	CASE ASS'Y (STACKABLE 2)	1	INCLUD. 506-508
506	336472	LATCH	4	
507	336473	HANDLE	1	
508	336474	HINGE	2	
509	376551	INNER TRAY	1	
OPTIONAL ACCESSORIES				
601	959611	SABER SAW BLADES NO. 4 (5 PCS.)	1	
602	318611	SABER SAW BLADES NO. 101 150L P.10 (5 PCS.)	1	
603	318612	SABER SAW BLADES NO. 102 228L P.10 (5 PCS.)	1	
604	318613	SABER SAW BLADES NO. 103 150L P.14 (5 PCS.)	1	
605	318614	SABER SAW BLADES NO. 104 228L P.14 (5 PCS.)	1	
606	318618	SABER SAW BLADES NO. 108 228L P.24 (5 PCS.)	1	
607	324818	SABER SAW BLADES NO. 109 150L P.18 (5 PCS.)	1	
608	324819	SABER SAW BLADES NO. 110 228L P.18 (5 PCS.)	1	
609	318619	SABER SAW BLADES NO. 121 305L P.6 (5 PCS.)	1	
610	318620	SABER SAW BLADES NO. 131 305L P.10/14 (5 PCS.)	1	
611	318621	SABER SAW BLADES NO. 132 203L (5 PCS.)	1	
612	370683	CURVED BLADES NO. 141(S)150L P.14 (3 PCS.)	1	
613	370684	CURVED BLADES NO. 142(S)200L P.14 (3 PCS.)	1	
614	370685	CURVED BLADES NO. 143(S)250L P.14 (3 PCS.)	1	
615	371902	CURVED BLADES NO. 158 200L P.8 (3 PCS.)	1	