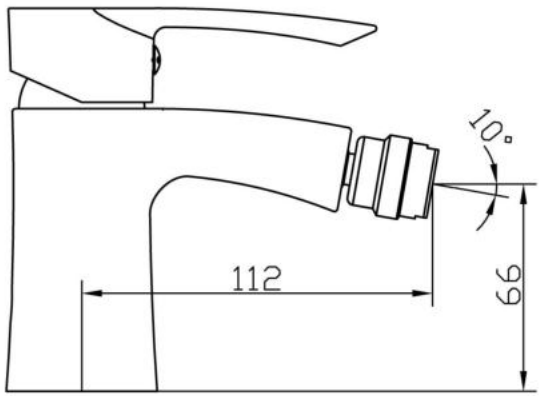

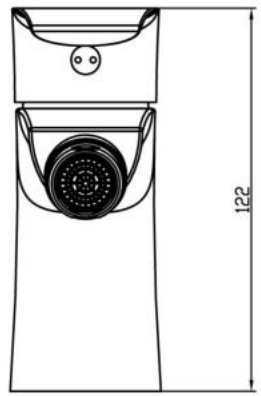

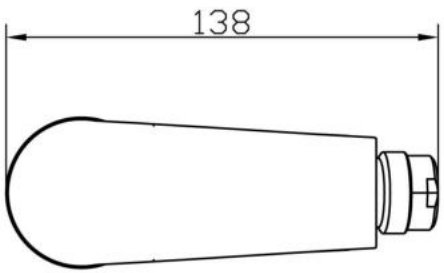



TN003