Product data sheet (PDF)

Metropol E
Single Lever Kitchen Mixer DN15

Description

- connecting hoses G 3/8
- QuickClean cleaning system
- ceramic cartridge, Boltic lever lock
- swivel spout 360°
- P-IX 9223/IB

Surfaces	Art. no.
chrome	14830000

Product image
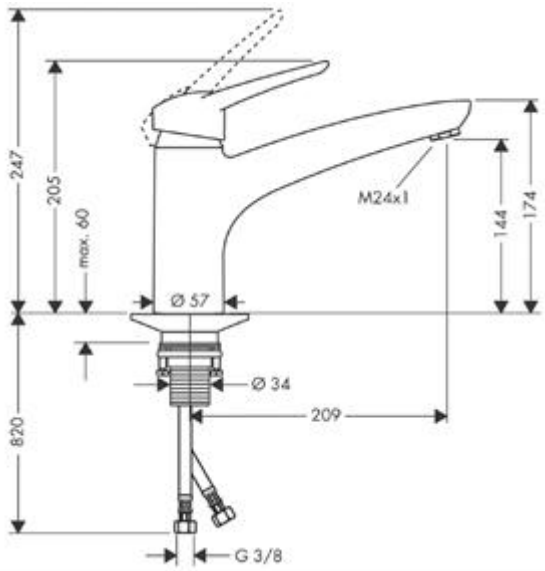
Scale drawing