Product data sheet (PDF)

Croma 100

Croma 100 Showerpipe Single Lever Mixer, DN15

Description

consisting of:

- ceramic cartridge, adjustable temperature restriction
- suitable for continuous flow water heaters, if the flow pressure at the mixer is a minimum of 0.15MPa
- centre distance 150±12mm
- Boltic lever lock
- diverter for hand shower
- Croma Ø 160mm overhead shower with QuickClean anti-limescale system (no.27450000)
- Croma 100 Vario hand shower (no.28535000)
- Isiflex shower hose 1.60m DN15 (no.28276000)
- height-adjustable shower holder
- wall bar spacer 7mm (no.95239000)
- PA-IX 19287/IOB

Surfaces	Art. no.
chrome	27154000

Product image
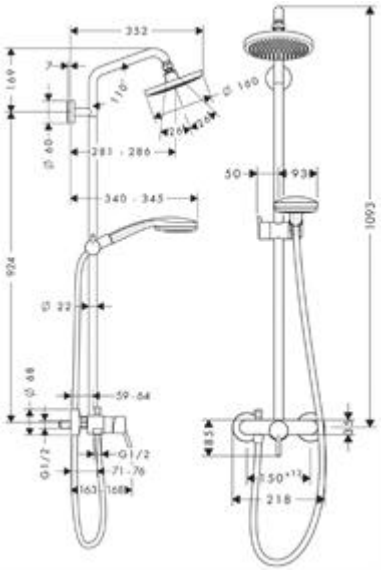
Scale drawing