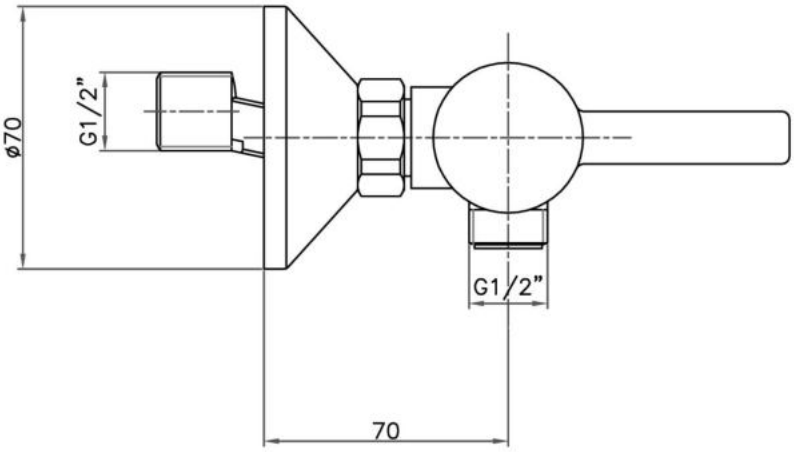

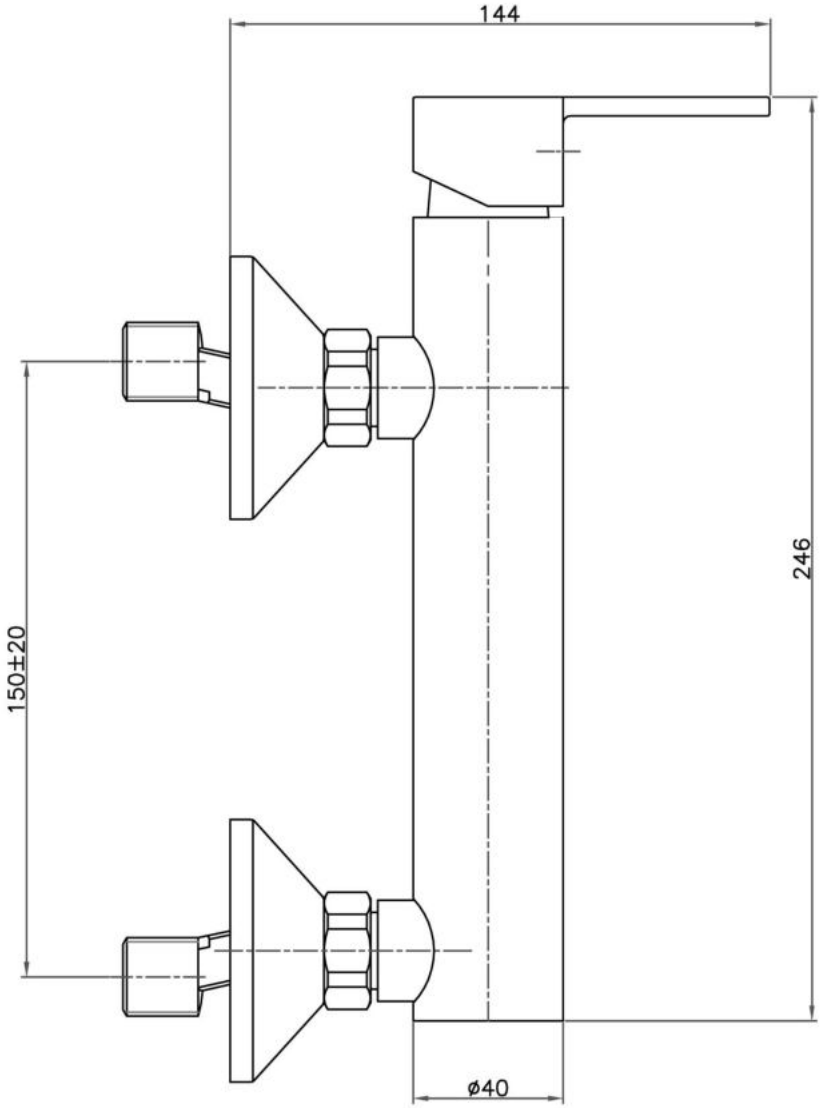

77CR7575