WILO

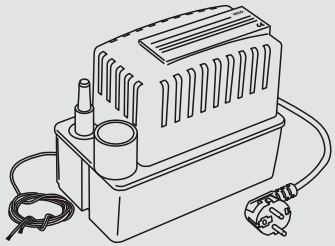

Wilo-DrainLift Con

D Einbau- und Betriebsanleitung

GB Installation and operating instructions

F Notice de montage et de mise en service

NL Inbouw- en bedieningsvoorschriften

I Istruzioni di montaggio, uso e manutenzione

DK Monterings- og driftsvejledning

CZ Návod k montáži a obsluze

RUS Инструкция по монтажу и эксплуатации

2528581-Ed.01/2009-03

Bohrschablone / Drill template / Gabarit / Boorsjabloon / Sagoma per fori /

Boreskabelon / Vratcí šablona / Шаблон для сверления (176 mm)

Fig. 1:

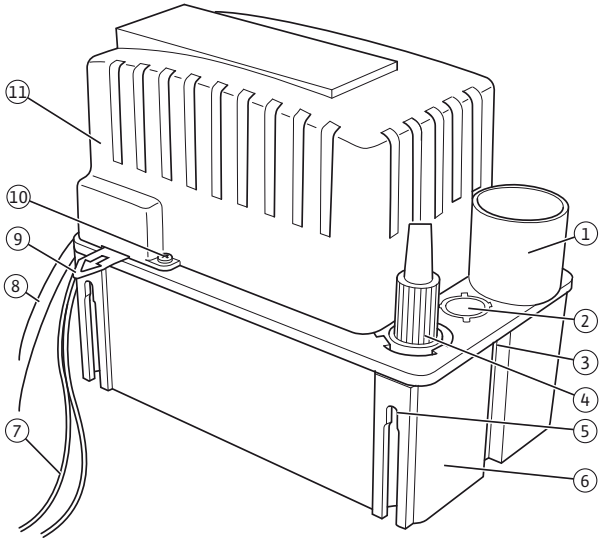

Fig. 2:

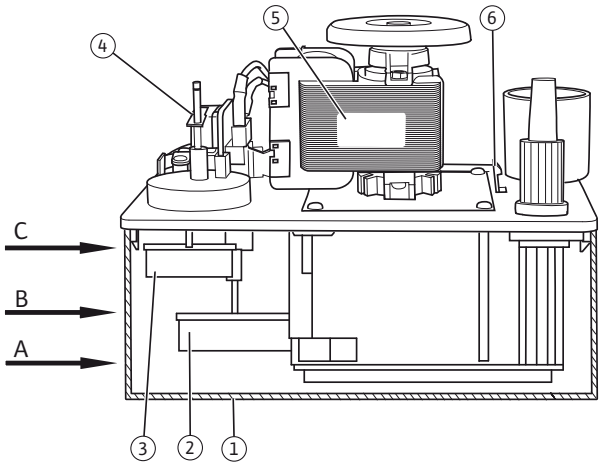

Fig. 3:

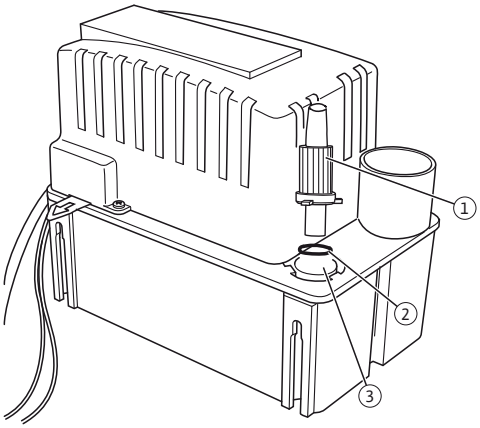

Fig. 4:

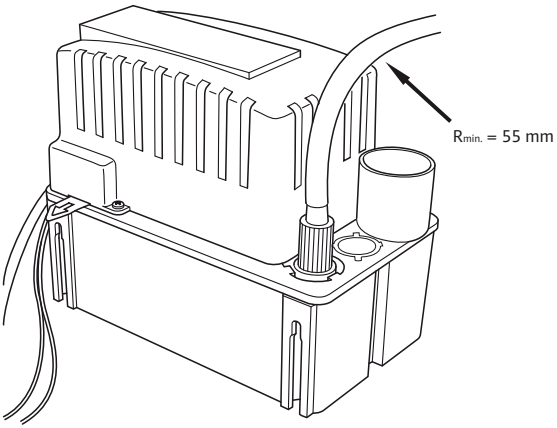

Fig. 5a:

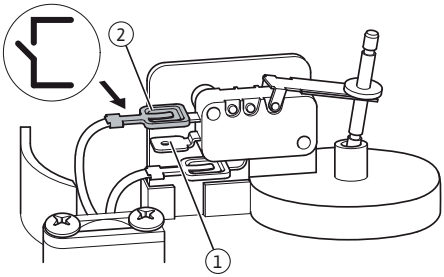

Fig. 5b:

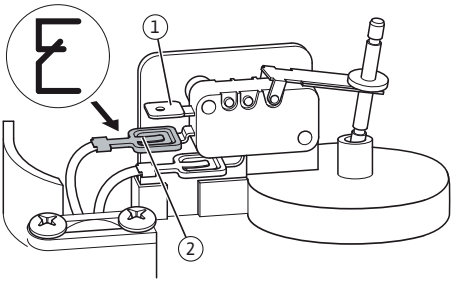

1 General

1.1 About this document

The language of the original operating instructions is German. All other languages of these instructions are translations of the original operating instructions.
These installation and operating instructions are an integral part of the unit. They must be kept readily available at the place where the unit is installed. Strict adherence to these instructions is a precondition for the proper use and correct operation of the unit.
These installation and operating instructions correspond to the relevant version of the unit and the underlying safety standards valid at the time of going to print.
EC declaration of conformity:
A copy of the EC declaration of conformity is a component of these operating instructions. If a technical modification is made on the designs named there without our agreement, this declaration loses its validity.

2 Safety

These operating instructions contain basic information which must be adhered to during installation and operation. For this reason, these operating instructions must, without fail, be read by the service technician and the responsible operator before installation and commissioning.
It is not only the general safety instructions listed under the main point “safety” that must be adhered to but also the special safety instructions with danger symbols included under the following main points.

2.1 Indication of instructions in the operating instructions

Symbols:

General danger symbol

Danger due to electrical voltage

NOTE

Signal words:

DANGER!
Acutely dangerous situation.
Non-observance results in death or the most serious of injuries.

WARNING!
The user can suffer (serious) injuries. "Warning" implies that (serious) injury to persons is probable if this information is disregarded.

CAUTION!
There is a risk of damage to the product/unit. "Caution" implies that damage to the product is likely if this information is disregarded.

NOTE: Useful information on handling the product. It draws attention to possible problems.

2.2 Personnel qualifications

The installation, maintenance and repair personnel must have the necessary qualifications for this work.

2.3 Danger in the event of non-observance of the safety instructions

Non-observance of the safety instructions can result in risk of injury to persons and damage to product/unit. Non-observance of the safety instructions can result in the loss of any claims to damages.
In detail, non-observance can, for example, result in the following risks:

- Failure of important product/unit functions
- Failure of required maintenance and repair procedures
- Danger to persons from electrical, mechanical and bacteriological influences
- Property damage.

2.4 Safety instructions for the operator

The existing directives for accident prevention must be adhered to.
Danger from electrical current must be eliminated. Local directives or general directives [e.g. IEC, VDE etc.] and local power supply companies must be adhered to.

2.5 Safety instructions for inspection and installation work

The operator must ensure that all inspection and installation work is carried out by authorised and qualified personnel, who are sufficiently informed from their own detailed study of the operating instructions.
Work on the product/unit should only be carried out when it has been brought to a standstill. It is mandatory that the procedure described in the installation and operating instructions for shutting down the product/unit be complied with.

2.6 Unauthorised modification and manufacture of spare parts

Modifications to the product/unit are only permissible after consultation with the manufacturer. Original spare parts and accessories authorised by the manufacturer ensure safety. The use of other parts can nullify the liability from the results of their usage.

2.7 Improper use

The operating reliability of the supplied product/unit is only guaranteed if the product/unit is used as intended in accordance with Section 4 of the operating instructions. The limit values must on no account fall under or exceed those specified in the catalogue/data sheet.

3 Transport and interim storage

Immediately check the product for any transit damage on arrival. If damage is detected, the necessary steps involving the forwarding agent must be taken within the specified period.

CAUTION! Risk of damage!
Inappropriate transport and interim storage can cause damage to the product.
The unit must be protected from moisture, frost and mechanical damage during transport and interim storage.

4 Intended use

The condensate lifting unit serves as a component in installations for pumping accumulated condensate. The condensate lifting unit works automatically and is ready for connection. It is not intended for installation in gas condensing boilers with a condensate pH value of 2.4 or higher.

CAUTION! Risk of damage!
If the condensate lifting unit is being used in gas-fired boilers with an output of > 200 kW, or in oil-fired boilers in general, a neutralisation unit must be installed upstream of it.

The condensate lifting unit can also be used in:

- Air-conditioning units, refrigerators and freezers, refrigerated display cases and evaporators.

The condensate lifting unit is not designed to be used by persons (including children) with impaired physical, sensory or mental capabilities or who have insufficient experience or knowledge to operate the unit.
Any such use is considered outside the intended use.

5 Product information

5.1 Type key

Example: Wilo-DrainLift Con	
DrainLift	= lifting unit
Con	= condensate

5.2 Technical data

General data	
Connected voltage	1 ~ 230 V
Frequency	50 Hz
Connecting cable	Mains cable: 2 m Alarm signal: 1 m
Connected load	60 W
Protection class	IP 20
Nominal current	0.6 A
Operating mode	S3 30% (Intermittent operation, 3 min., 7 min. operation, pause)
Approved medium	Condensate water
Permissible fluid temperature	max. 50 °C
Delivery head	max. 5.5 m
Sound pressure level	< 50 dBA at 1 m
Tank volume	1.2 l
Weight approx.	2.1 kg
Dimensions	Width: 210 mm
	Height: 120 mm
	Depth: 167 mm
Inlet connections	Diameter 30 mm Diameter 19 mm
Discharge connection	Diameter 10 mm

5.3 Scope of delivery

- Condensate lifting unit, ready for connection
- Condensate drain off with integrated non-return valve
- Mains cable with plug (2 m)
- Alarm cable with stripped cable ends (1 m)
- Hose for pressure side (5 m)
- Wall mounting material (drill template, screws, dowels)
- Installation and operating instructions

5.4 Accessories

Accessories must be ordered separately.

- Wilo-DrainAlarm 2 (switchgear for acoustic alarm function)
- Inlet adapter DN 40/30

6 Description and function

6.1 Description

The condensate lifting unit serves as a component in installations for pumping accumulated condensate. The condensate lifting unit is used when the condensate cannot be disposed of via a natural fall or when the installation site of the system lies below the backflow level.
The unit is ready for connection and is fitted with a mains plug (1 ~ 230 V) for a shock-proof socket. The condensate inlet connection and the condensate discharge connection are in the cover of the condensate collection reservoir (Fig. 1, item 6). A non-return valve is built into the condensate discharge connection (Fig. 1, item 4).

External view of the product (Fig. 1):
1: Condensate inlet (30 mm) with inlet adapter DN 40/30 (accessory)
2: Connection for additional condensate inlet (19 mm)
3: Clips for opening the condensate collection reservoir
4: Condensate discharge with non-return valve
5: Wall bracket
6: Condensate collection reservoir
7: Alarm cable
8: Mains connection
9: Transport securing mechanism
10: Housing cover fixing screw
11: Housing cover

Interior view of the product (Fig. 2):
1: Condensate collection reservoir
2: Pump function on/off floater
3: Alarm floater
4: Alarm switch
5: Motor unit
6: Clips for opening motor unit
A: Cut-off level
B: Cut-in level
C: Alarm level

6.2 Function

The condensate lifting unit is controlled via three switching points.

- If the condensate level in the condensate collection reservoir reaches 43 mm (Fig. 2, item B), the cut-in level is reached and the pumping sequence begins.
- If the condensate level in the condensate collection reservoir drops to 27 mm (Fig. 2, item A), the cut-off level is reached and the pumping sequence stops.
- If the condensate level in the condensate collection reservoir reaches 67 mm (Fig. 2, item C), the alarm level is reached and the alarm switch triggers the alarm.
  The alarm switch is built into the unit, and serves as an overflow protection measure. It is connected to the unit in which the condensate collects or to the Wilo-DrainAlarm 2 by the 1 m long alarm cable.
  The unit is fitted with a monoblock centrifugal pump. The unit motor has a thermal winding contact (WSK) which switches off at a temperature of 130 °C and automatically switches on again once the temperature has cooled.

7 Installation and electrical connection

DANGER! Risk of fatal injury!
Incorrect installation and improper electrical connections can be life-threatening.

- **The installation and electrical connection must be carried out only by qualified personnel in accordance with applicable regulations.**
- **Observe the regulations for accident prevention.**
- **Before installation and electrical connection, disconnect the system from the power supply and make sure it cannot be switched on by unauthorised persons.**
- **Disconnect the mains plug!**

7.1 Preparations for installation

- Select an installation location suitable for the size of the unit and accessibility of the connections.
- Dimensions of the unit (H x W x D): 210 mm x 120 mm x 167 mm
- The condensate lifting unit must be installed in a dry, well-ventilated, frost-free room.

NOTE! The motor unit of the condensate lifting unit can be placed either clockwise or anti-clockwise on the condensate lifting unit, depending on the installation site.

- Press in the housing clips (Fig. 1, item 3).
- Remove the motor unit.
- If necessary, turn the motor unit, set it in place and press down until the housing clips click audibly.

7.2 Wall-mounted installation

WARNING! Risk of injury!
If installation is not properly carried out there is a risk of injury and the unit can be damaged. Have installation carried out by qualified personnel only.

CAUTION! Risk of damage!
Position the product on the wall and align it horizontally with a spirit level. The product must be aligned perfectly in order to function properly.

- Mark the boreholes on the wall with the aid of a drill template.
- Fasten the unit to the wall with 2 screws ∅ 4 mm.
  The drill template is on the first pages of this instruction manual.

7.3 Installing the condensate lifting unit

CAUTION! Danger of malfunction!
Improper inlet and discharge connections can cause the machine to malfunction. The inlet and discharge hoses must not become trapped or kinked after installation. The permissible bending radius of the hoses must not be less than 55 mm (Fig. 4).
In order to guarantee optimum pumping of condensate, the condensate must flow unhindered into the unit via the inlet hose, and the discharge hose must always be routed on a constantly rising gradient.
The 30 mm diameter (Fig. 1, item 1) condensate inlet opening is in the condensate collection reservoir. If necessary, a second inlet with a diameter of 19 mm (Fig. 1, item 2) can be used by pressing out the perforated seal. A hose with a diameter of 10 mm is provided for connecting the condensate discharge pipe (Fig. 1, item 4).

- Connect the condensate inlet pipe to the inlet opening (Fig. 1, item 1). The inlet adapter DN 40/30 is available as an accessory.
- Connect the condensate discharge pipe to the discharge non-return valve (Fig. 1, item 4).

7.4 Electrical connection

DANGER! Danger of electric shock!
Electrical connection may only be carried out by an electrician authorised by the local electricity supply company and in accordance with the applicable local regulations [e.g. VDE regulations].

- The mains current, the current type and the voltage of the mains connection must match the details on the name plate.
- Provide a separate alarm switchgear (Wilo-DrainAlarm 2) in accordance with the nameplate data.

7.5 Mains power supply

- Connection voltage 1 ~ 230 V.
- Fuse on mains side 10 A slow-blow.
- Residual-current-operated protection switch acc. to IEC 345.

7.6 Electrical connection alarm

DANGER! Risk of fatal injury!!
Improper electrical connections can lead to fatal electrical shocks. Electrical connection may only be carried out by an electrician authorised by the local electricity supply company and in accordance with the applicable local regulations [e.g. VDE regulations]. Before establishing the electrical connection, ensure the unit is disconnected from the power supply.

NOTE! When connecting the alarm cable to the condensing boiler or the alarm switchgear, observe the corresponding operating instructions for the device.

- Connect an alarm cable (Fig. 1, item 7) with stripped cable ends to the connection of the condensing boiler.
- Earth the system according to regulations.
- Maximum contact load 250 V / 1 A
  The alarm contact (Fig. 5a, item b) is factory-set as a potential-free normally closed contact (Fig. 5b). The contact opens when the alarm level is reached.
  To use the alarm contact as a normally open contact (Fig. 5a), follow the steps below:
- Undo the fixing screw (Fig. 1, item 10) of the housing cover.
- Press in the housing clips (Fig. 2, item 6) and remove the housing cover.
- Pull the blade receptacle (Fig. 5b, item 2) off the centre contact of the alarm switch.
- Attach the blade receptacle to the top contact (Fig. 5b, item 1).
- Put the housing cover back in place and press down until the housing clips (Fig. 2, item 6) audibly click into place.
- Fasten the fastening screw (Fig. 1, item 10).

CAUTION! Risk of damage!
The alarm contact must be connected in order to ensure that the whole system (condensing boiler or cooling device) switches off in case of an overflow. Failure to ensure that the alarm contact is connected could result in you being held liable for the results of such a situation.

8 Commissioning

NOTE! The unit may only be commissioned if the applicable local regulations and requirements (e. g. VDE specifications) and all connection specifications have been fulfilled.

CAUTION! Risk of damage!
The transport securing mechanism blocks the function of the floater. There is a risk of the unit overflowing. Before commissioning the condensate lifting unit, the transport securing mechanism (Fig. 1, item 9) must be removed in order to ensure that the unit functions properly. Pull out the two plastic clips on the left and right hand sides of the device to remove them. When pulling out the transport securing mechanism, hold the device steady with your other hand.

8.1 Functional check

- Plug in the mains plug.
- Fill the unit with clean water and check that the pumping sequence starts when the water reaches the cut-in level (Fig. 2, item B).
- Check that the pumping sequence stops as soon as the water level reaches the cut-off level (Fig. 2, item A).
  To check the unit's alarm function, fill it with clean water until the water level reaches the alarm level (Fig. 2, item C) and the alarm switch is triggered.

NOTE! In order to avoid increased running noise and protect the unit, there must be no dirt in the condensate lifting unit.

9 Maintenance

Have maintenance and repair work carried out by qualified specialist personnel only!

DANGER! Risk of fatal injury!
There is risk of fatal injury due to electric shocks when working on electrical equipment. The device should be electrically isolated and secured against unauthorised switch-on before any maintenance or repair work. Damage to the connection cables should always be rectified by a qualified electrician only.

NOTE! For safety reasons, it is not possible to disassemble the motor unit of the condensate lifting unit.

9.1 Cleaning the condensate collection reservoir

The inside of the condensate collection reservoir must be cleaned regularly.

- Remove the condensate collection reservoir (Fig. 1, item 6) by pressing in the clips (Fig. 1, item 3) and clean with a 5% bleach base solution.
- Check the floater for dirt and, if necessary, clean with water or a 5% bleach base solution.
- Remount the condensate collection reservoir.
- Perform a functional check (section 8.1).

9.2 Check the condensate drainage with the non-return valve

NOTE! Regularly check the non-return valve and the seal below it for dirt and blockages.

- Turn the non-return valve (Fig. 3, item 1) anti-clockwise and pull it off in an upward direction.
- Check the non-return valve for dirt and clean if necessary.
- Check the seal (Fig. 3, item 2) for dirt and clean if necessary.
- Place the seal in the connection of the non-return valve (Fig. 3, item 3).
- Push the non-return valve down and turn it clockwise at the same time.

CAUTION! Risk of damage!
Never use aggressive cleaning agents or sharp-edged tools, as these could damage the seal. Use only clean water to clean the seal of the non-return valve.

- Perform a functional check (section 8.1).

10 Faults, causes and remedies

Only have faults rectified by qualified personnel! Observe the safety instructions in Chapter 9 – Maintenance.

DANGER! Risk of fatal injury!

There is risk of fatal injury due to electric shocks when working on electrical equipment.

Before all work to remedy faults, disconnect the unit from the power supply, and make sure it cannot be switched back on by unauthorised persons.

Fault	Cause	Remedies
The pump does not start.	Interruption to current supply.	Check that the mains plug is connected to the correct power supply point. Check mains voltage.
	Fuse defective.	Have the fuse replaced.
	Cable interruption.	Check the resistance of the cable, have cable replaced if defective or damaged.
	Floaters not moving / level switching not switching.	Clean the condensate collection reservoir. Clean the floaters.
The pump does not pump.	Condensate inlet pipe blocked.	Clean the inlet pipe.
	Condensate discharge pipe blocked.	Clean the discharge pipe.

NOTE! If the fault cannot be remedied, please consult a specialist technician or your nearest Wilo after-sales service point or representative.

11 Spare parts

Spare parts may be ordered via a local specialist and/or Wilo after-sales service. To avoid queries and incorrect orders, all data on the name plate should be submitted with each order.

D EG – Konformitätserklärung
GB EC – Declaration of conformity
F Déclaration de conformité CE

Hiermit erklären wir, dass die Bauarten der Baureihe : **DrainLift Con**
Herewith, we declare that this product:
Par le présent, nous déclarons que cet agrégat :

in der gelieferten Ausführung folgenden einschlägigen Bestimmungen entspricht:
in its delivered state complies with the following relevant provisions:
est conforme aux dispositions suivants dont il relève:

Elektromagnetische Verträglichkeit – Richtlinie **2004/108/EG**
Electromagnetic compatibility – directive
Compatibilité électromagnétique– directive

Niederspannungsrichtlinie **2006/95/EG**
Low voltage directive
Directive basse-tension

und entsprechender nationaler Gesetzgebung.
and with the relevant national legislation.
et aux législations nationales les transposant.

Angewendete harmonisierte Normen, insbesondere:
Applied harmonized standards, in particular:
Normes harmonisées, notamment:

EN 50366
EN 55014-1
EN 55014-2
EN 60335-1
EN 60335-2-41
EN 61000-3-2
EN 61000-3-3

Bei einer mit uns nicht abgestimmten technischen Änderung der oben genannten Bauarten, verliert diese Erklärung ihre Gültigkeit.
If the above mentioned series are technically modified without our approval, this declaration shall no longer be applicable.
Si les gammes mentionnées ci-dessus sont modifiées sans notre approbation, cette déclaration perdra sa validité.

Dortmund, 19.12.2008

i. V.
Erwin Prieß
Quality Manager

WILO

WILO SE
Nortkirchenstraße 100
44263 Dortmund
Germany

Document: 2044125.2

NL **EG-verklaring van overeenstemming**
Hiermede verklaren wij dat dit aggregaat in de geleverde uitvoering voldoet aan de volgende bepalingen:

Elektromagnetische compatibiliteit 2004/108/EG

EG-laagspanningsrichtlijn 2006/95/EG

Gebruikte geharmoniseerde normen, in het bijzonder: 1)

I **Dichiarazione di conformità CE**
Con la presente si dichiara che i presenti prodotti sono conformi alle seguenti disposizioni e direttive rilevanti:

Compatibilità elettromagnetica 2004/108/EG

Direttiva bassa tensione 2006/95/EG

Norme armonizzate applicate, in particolare: 1)

E **Declaración de conformidad CE**
Por la presente declaramos la conformidad del producto en su estado de suministro con las disposiciones pertinentes siguientes:

Directiva sobre compatibilidad electromagnética 2004/108/EG

Directiva sobre equipos de baja tensión 2006/95/EG

Normas armonizadas adoptadas, especialmente: 1)

P **Declaração de Conformidade CE**
Pela presente, declaramos que esta unidade no seu estado original, está conforme os seguintes requisitos:

Compatibilidade electromagnética 2004/108/EG

Directiva de baixa voltagem2006/95/EG

Normas harmonizadas aplicadas, especialmente: 1)

S **CE- försäkran**
Härmed förklarar vi att denna maskin i levererat utförande motsvarar följande tillämpliga bestämmelser:

EG–Elektromagnetisk kompatibilitet – riktlinje 2004/108/EG

EG–Lågspänningsdirektiv 2006/95/EG

Tillämpade harmoniserade normer, i synnerhet: 1)

N **EU-Overensstemmelseserklæring**
Vi erklærer hermed at denne enheten i utførelse som levert er i overensstemmelse med følgende relevante bestemmelser:

EG–EMV–Elektromagnetisk kompatibilitet 2004/108/EG

EG–Lavspenningsdirektiv 2006/95/EG

Anvendte harmoniserte standarder, særlig: 1)

FIN **CE-standardinmukaisuusseloste**
Ilmoitamme täten, että tämä laite vastaa seuraavia asiaankuuluvia määräyksiä:

Sähkömagneettinen soveltuvuus 2004/108/EG

Matalajännite direktiivit: 2006/95/EG

Käytetyt yhteensovitetut standardit, erityisesti: 1)

DK **EF-overensstemmelseserklæring**
Vi erklærer hermed, at denne enhed ved levering overholder følgende relevante bestemmelser:

Elektromagnetisk kompatibilitet: 2004/108/EG

Lavvolts-direktiv 2006/95/EG

Anvendte harmoniserede standarder, særligt: 1)

H **EK. Azonossági nyilatkozat**
Ezennel kijelentjük,hogy az berendezés az alábbiaknak megfelel:

Elektromágneses zavarás/türés: 2004/108/EG

Kisfeszültségü berendezések irány-Elve: 2006/95/EG

Felhasznált harmonizált szabványok, különösen: 1)

CZ **Prohlášení o shodě EU**
Prohlašujeme tímto, že tento agregát v dodaném provedení odpovídá následujícím příslušným ustanovením:

Směrnicím EU–EMV 2004/108/EG

Směrnicím EU–nízké napětí 2006/95/EG

Použité harmonizační normy, zejména: 1)

PL **Deklaracja Zgodności CE**
Niniejszym deklarujemy z pełną odpowiedzialnością że dostarczony wyrób jest zgdony z następującymi dokumentami:

Odpowiedniość elektromagnetyczna 2004/108/EG

Normie niskich napięć 2006/95/EG

Wyroby są zgodne ze szczegółowymi normami zharmonizowanymi: 1)

RUS **Деклация о соответствии Европейским нормам**
Настоящим документом заявляем, что данный агрегат в его объеме поставки соответствует следующим нормативным документам:

Электромагнитная устойчивость 2004/108/EG

Директивы по низковольтному напряжению 2006/95/EG

Используемые согласованные стандарты и нормы, в частности : 1)

GR **Δήλωση προσαρμογής της Ε.Ε.**
Δηλώνουμε ότι το προϊόν αυτό σ' αυτή την κατάσταση παράδοσης ικανοποιεί τις ακόλουθες διατάξεις :

Ηλεκτρομαγνητική συμβατότητα EG-2004/108/EG

Οδηγία χαμηλής τάσης EG–2006/95/EG

Εναρμονισμένα χρησιμοποιούμενα πρότυπα, ιδιαίτερα: 1)

TR **EC Uygunluk Teyid Belgesi**
Bu cihazın teslim edildiği şekliyle aşağıdaki standartlara uygun olduğunu teyid ederiz:

Elektromanyetik Uyumluluk 2004/108/EG

Alçak gerilim direktifi 2006/95/EG

Kısmen kullanılan standartlar: 1)

1) **EN 50366,**
EN 55014-1,
EN 55014-2,
EN 60335-1,
EN 60335-2-41,
EN 61000-3-2,
EN 61000-3-3.

i. V.

Erwin Prieß
Quality Manager

WILO SE
Nortkirchenstraße 100
44263 Dortmund
Germany

WILO SE
Nortkirchenstraße 100
44263 Dortmund
Germany
T +49 231 4102-0
F +49 231 4102-7363
wilo@wilo.com
www.wilo.com

Wilo – International (Subsidiaries)

Argentina
WILO SALMSON
Argentina S.A.
C1295ABI Ciudad
Autónoma de
Buenos Aires
T +54 11 4361 5929
info@salmon.com.ar

Austria
WILO Pumpen
Österreich GmbH
1230 Wien
T +43 507 507-0
office@wilo.at

Azerbaijan
WILO Caspian LLC
1065 Baku
T +994 12 5962372
info@wilo.az

Belarus
WILO Bel OOO
220035 Minsk
T +375 17 2503393
wilobel@wilo.by

Belgium
WILO SA/NV
1083 Ganshoren
T +32 2 4823333
info@wilo.be

Bulgaria
WILO Bulgaria Ltd.
1125 Sofia
T +359 2 9701970
info@wilo.bg

Canada
WILO Canada Inc.
Calgary, Alberta T2A 5L4
T +1 403 2769456
bill.lowe@wilo-na.com

China
WILO China Ltd.
101300 Beijing
T +86 10 80493900
wilobj@wilo.com.cn

Croatia
WILO Hrvatska d.o.o.
10090 Zagreb
T +38 51 3430914
wilo-hrvatska@wilo.hr

Czech Republic
WILO Praha s.r.o.
25101 Cestlice
T +420 234 098711
info@wilo.cz

Denmark
WILO Danmark A/S
2690 Karlslunde
T +45 70 253312
wilo@wilo.dk

Estonia
WILO Eesti OÜ
12618 Tallinn
T +372 6509780
info@wilo.ee

Finland
WILO Finland OY
02330 Espoo
T +358 207401540
wilo@wilo.fi

France
WILO S.A.S.
78390 Bois d'Arcy
T +33 1 30050930
info@wilo.fr

Great Britain
WILO (U.K.) Ltd.
DE14 2WJ Burton-
Upon-Trent
T +44 1283 523000
sales@wilo.co.uk

Greece
WILO Hellas AG
14569 Anixi (Attika)
T +302 10 6248300
wilo.info@wilo.gr

Hungary
WILO Magyarország Kft
2045 Törökbálint
(Budapest)
T +36 23 889500
wilo@wilo.hu

Ireland
WILO Engineering Ltd.
Limerick
T +353 61 227566
sales@wilo.ie

Italy
WILO Italia s.r.l.
20068 Peschiera
Borromeo (Milano)
T +39 25538351
wilo.italia@wilo.it

Kazakhstan
WILO Central Asia
050002 Almaty
T +7 727 2785961
in.pak@wilo.kz

Korea
WILO Pumps Ltd.
621-807 Gimhae
Gyeongnam
T +82 55 3405800
wilo@wilo.co.kr

Latvia
WILO Baltic SIA
1019 Riga
T +371 67 145229
mail@wilo.lv

Lebanon
WILO SALMSON
Lebanon
12022030 El Metn
T +961 4 722280
wsl@cyberia.net.lb

Lithuania
WILO Lietuva UAB
03202 Vilnius
T +370 5 2136495
mail@wilo.lt

The Netherlands
WILO Nederland b.v.
1551 NA Westzaan
T +31 88 9456 000
info@wilo.nl

Norway
WILO Norge AS
0975 Oslo
T +47 22 804570
wilo@wilo.no

Poland
WILO Polska Sp. z.o.o.
05-090 Raszyn
T +48 22 7026161
wilo@wilo.pl

Portugal
Bombas Wilo-Salmson
Portugal Lda.
4050-040 Porto
T +351 22 2080350
bombas@wilo.pt

Romania
WILO Romania s.r.l.
077040 Com. Chiajna
Jud. Ilfov
T +40 21 3170164
wilo@wilo.ro

Russia
WILO Rus ooo
123592 Moscow
T +7 495 7810690
wilo@wilo.ru

Saudi Arabia
WILO ME - Riyadh
Riyadh 11465
T +966 1 4624430
wshoula@wataniaind.com

Serbia and Montenegro
WILO Beograd d.o.o.
11000 Beograd
T +381 11 2851278
office@wilo.co.yu

Slovakia
WILO Slovakia s.r.o.
82008 Bratislava 28
T +421 2 45520122
wilo@wilo.sk

Slovenia
WILO Adriatic d.o.o.
1000 Ljubljana
T +386 1 5838130
wilo.adriatic@wilo.si

South Africa
Salmson South Africa
1610 Edenvale
T +27 11 6082780
errol.cornelius@
salmson.co.za

Spain
WILO Ibérica S.A.
28806 Alcalá de
Henares (Madrid)
T +34 91 8797100
wilo.iberica@wilo.es

Sweden
WILO Sverige AB
35246 Växjö
T +46 470 727600
wilo@wilo.se

Switzerland
EMB Pumpen AG
4310 Rheinfelden
T +41 61 83680-20
info@emb-pumpen.ch

Taiwan
WILO-EMU Taiwan Co.
Ltd.
110 Taipeh
T +886 227 391655
nelson.wu@
wiloemutaiwan.com.tw

Turkey
WILO Pompa Sistemleri
San. ve Tic. A.Ş.
34530 Istanbul
T +90 216 6610211
wilo@wilo.com.tr

Ukraina
WILO Ukraina t.o.w.
01033 Kiew
T +38 044 2011870
wilo@wilo.ua

Vietnam
Pompes Salmson
Vietnam
Ho Chi Minh-Ville
Vietnam
T +84 8 8109975
nkm@salmson.com.vn

United Arab Emirates
WILO Middle East FZE
Jebel Ali - Dubai
T +971 4 886 4771
info@wilo.com.sa

USA
WILO-EMU USA LLC
Thomasville,
Georgia 31792
T +1 229 5840097
info@wilo-emu.com

USA
WILO USA LLC
Melrose Park, Illinois
60160
T +1 708 3389456
mike.easterley@
wilo-na.com

Wilo – International (Representation offices)

Algeria
Bad Ezzouar, Dar El
Beida
T +213 21 247979
chabane.hamdad@
salmson.fr

Armenia
375001 Yerevan
T +374 10 544336
info@wilo.am

Bosnia and Herzegovina
71000 Sarajevo
T +387 33 714510
zeljko.cvjetkovic@
wilo.ba

Georgia
0179 Tbilisi
T +995 32 306375
info@wilo.ge

Macedonia
1000 Skopje
T +389 2 3122058
valerij.vojneski@
wilo.com.mk

Mexico
07300 Mexico
T +52 55 55863209
roberto.valenzuela@
wilo.com.mx

Moldova
2012 Chisinau
T +373 2 223501
sergiu.zagurean@wilo.md

Rep. Mongolia
Ulaanbaatar
T +976 11 314843
wilo@magicnet.mn

Tajikistan
734025 Dushanbe
T +992 37 2232908
farhod.rahimov@wilo.tj

Turkmenistan
744000 Ashgabad
T +993 12 345838
wilo@wilo-tm.info

Uzbekistan
100015 Tashkent
T +998 71 1206774
info@wilo.uz

June 2009

WILO SE
Nortkirchenstraße 100
44263 Dortmund
Germany
T 0231 4102-0
F 0231 4102-7363
wilo@wilo.com
www.wilo.de

Wilo-Vertriebsbüros in Deutschland

G1 Nord
WILO SE
Vertriebsbüro Hamburg
Beim Strohhause 27
20097 Hamburg
T 040 5559490
F 040 55594949
hamburg.anfragen@wilo.com

G2 Nord-Ost
WILO SE
Vertriebsbüro Berlin
Juliusstraße 52–53
12051 Berlin-Neukölln
T 030 6289370
F 030 62893770
berlin.anfragen@wilo.com

G3 Ost
WILO SE
Vertriebsbüro Dresden
Frankenring 8
01723 Kesselsdorf
T 035204 7050
F 035204 70570
dresden.anfragen@wilo.com

G4 Süd-Ost
WILO SE
Vertriebsbüro München
Adams-Lehmann-Straße 44
80797 München
T 089 4200090
F 089 42000944
muenchen.anfragen@wilo.com

G5 Süd-West
WILO SE
Vertriebsbüro Stuttgart
Hertichstraße 10
71229 Leonberg
T 07152 94710
F 07152 947141
stuttgart.anfragen@wilo.com

G6 Mitte
WILO SE
Vertriebsbüro Frankfurt
An den drei Hasen 31
61440 Oberursel/Ts.
T 06171 70460
F 06171 704665
frankfurt.anfragen@wilo.com

G7 West
WILO SE
Vertriebsbüro Düsseldorf
Westring 19
40721 Hilden
T 02103 90920
F 02103 909215
duesseldorf.anfragen@wilo.com

Kompetenz-Team Gebäudetechnik

WILO SE
Nortkirchenstraße 100
44263 Dortmund
T 0231 4102-7516
T 01805 R•U•F•W•I•L•O* 7•8•3•9•4•5•6
F 0231 4102-7666

Erreichbar Mo–Fr von 7–18 Uhr.

- Antworten auf
  - Produkt- und Anwendungsfragen
  - Liefertermine und Lieferzeiten
- Informationen über Ansprechpartner vor Ort
- Versand von Informationsunterlagen

Kompetenz-Team Kommune Bau + Bergbau

WILO EMU GmbH
Heimgartenstraße 1
95030 Hof
T 09281 974-550
F 09281 974-551

Werkskundendienst Gebäudetechnik Kommune Bau + Bergbau Industrie

WILO SE
Nortkirchenstraße 100
44263 Dortmund
T 0231 4102-7900
T 01805 W•I•L•O•K•D* 9•4•5•6•5•3
F 0231 4102-7126
kundendienst@wilo.com

Erreichbar Mo–Fr von 7–17 Uhr.
Wochenende und feiertags 9–14 Uhr elektronische Bereitschaft mit Rückruf-Garantie!

- Kundendienst-Anforderung
- Werksreparaturen
- Ersatzteilfragen
- Inbetriebnahme
- Inspektion
- Technische Service-Beratung
- Qualitätsanalyse

Wilo-International

Österreich
Zentrale Wien:
WILO Pumpen Österreich GmbH
Eitnergasse 13
1230 Wien
T +43 507 507-0
F +43 507 507-15

Vertriebsbüro Salzburg:
Gnigler Straße 56
5020 Salzburg
T +43 507 507-13
F +43 507 507-15

Vertriebsbüro Oberösterreich:
Trattnachtalstraße 7
4710 Grieskirchen
T +43 507 507-26
F +43 507 507-15

Schweiz
EMB Pumpen AG
Gerstenweg 7
4310 Rheinfelden
T +41 61 83680-20
F +41 61 83680-21

Standorte weiterer Tochtergesellschaften

Argentinien, Aserbaidschan, Belarus, Belgien, Bulgarien, China, Dänemark, Estland, Finnland, Frankreich, Griechenland, Großbritannien, Irland, Italien, Kanada, Kasachstan, Korea, Kroatien, Lettland, Libanon, Litauen, Niederlande, Norwegen, Polen, Portugal, Rumänien, Russland, Saudi-Arabien, Schweden, Serbien und Montenegro, Slowakei, Slowenien, Spanien, Südafrika, Taiwan, Tschechien, Türkei, Ukraine, Ungarn, Vereinigte Arabische Emirate, Vietnam, USA

Die Adressen finden Sie unter **www.wilo.de** oder **www.wilo.com**.

Stand Februar 2009

* 14 Cent pro Minute aus dem deutschen Festnetz der T-Com. Bei Anrufen aus Mobilfunknetzen sind Preisabweichungen möglich.